Introduction

This manual provides information needed to operate and understand the school bus chassis and its components. More detailed information is contained in the *Owner's Warranty Information for North America* booklet, and in the vehicle's workshop and maintenance manuals.

Freightliner chassis are equipped with various chassis and cab components. Not all of the information contained in this manual applies to every vehicle. If parts on your chassis differ from those shown, they may have been installed by the vehicle manufacturer; if so, service part responsibility belongs to the vehicle manufacturer.

The safety or performance of your vehicle could be adversely affected by the installation of nonstandard components. Note the limitations and specifications provided in the vehicle and chassis manuals, and consult your selling dealer before making any alterations to the vehicle or chassis.

For your reference, keep this manual in the vehicle at all times.

IMPORTANT: Descriptions and specifications in this manual were in effect at the time of printing. Freightliner Custom Chassis Corporation reserves the right to discontinue models and to change specifications or design at any time without notice and without incurring obligation. Descriptions and specifications contained in this publication provide no warranty, expressed or implied, and are subject to revisions and editions without notice.

Environmental Concerns and Recommendations

Whenever you see instructions in this manual to discard materials, you should first attempt to reclaim and recycle them. To preserve our environment, follow appropriate environmental rules and regulations when disposing of materials.

Event Data Recorder

This vehicle is equipped with one or more devices that record specific vehicle data. The type and amount of data recorded varies depending on how the vehicle is equipped (such as the brand of engine, if an air bag is installed, or if the vehicle features a collision avoidance system, etc.).

Customer Assistance Center

Having trouble finding service? Call the Customer Assistance Center at 1–800–385–4357 or 1–800–FTL–HELP. Call night or day, weekdays or weekends, for

STI-346 (8/05P)
Printed in U.S.A.

dealer referral, vehicle information, or breakdown coordination. Our people are knowledgeable, professional, and committed to keeping your vehicle moving.

Reporting Safety Defects

If you believe that your vehicle has a defect which could cause a crash or could cause injury or death, you should immediately inform the National Highway Traffic Safety Administration (NHTSA) in addition to notifying Freightliner Custom Chassis Corporation.

If the NHTSA receives similar complaints, it may open an investigation, and if it finds that a safety defect exists in a group of vehicles, it may order a recall and remedy campaign. However, NHTSA cannot become involved in individual problems between you, your dealer, or Freightliner Custom Chassis Corporation.

To contact NHTSA, you may call the Vehicle Safety Hotline toll-free at 1-888-327-4236 (TTY: 1-800-424-9153); go to http://www.safercar.gov; or write to: Administrator, NHTSA, 400 Seventh Street, SW, Washington, DC 20590. You can also obtain other information about motor vehicle safety from http://www.safercar.gov.

Canadian customers who wish to report a safety-related defect to Transport Canada, Defect Investigations and Recalls, may telephone the toll-free hotline 1-800-333-0510, or contact Transport Canada by mail at: Transport Canada, ASFAD, Place de Ville Tower C, 330 Sparks Street, Ottawa, Ontario, Canada K1A 0N5.

For additional road safety information, please visit the Road Safety website at: http://www.tc.gc.ca/roadsafety/menu.htm

Contents

1

Vehicle Identification

Vehicle Specification Label

The vehicle specification label lists the vehicle model, identification number, and major component models. It also recaps the major assemblies and installations shown on the chassis specification sheet. See **Fig. 1.1**.

NOTE: Labels shown in this chapter are examples only. Actual specifications may vary from vehicle to vehicle.

Federal Motor Vehicle Safety Standard (FMVSS) Labels

If purchased for service in the U.S., chassis built without a body have a certification label similar to that shown in **Fig. 1.2**. In addition, after completion of the vehicle, a certification label similar to that shown in **Fig. 1.3** must be attached by the final-stage manufacturer. This label certifies that the vehicle conforms to all applicable FMVSS regulations in effect on the date of completion.

NOTE: On incomplete vehicles, it is the responsibility of the final-stage manufacturer to complete the vehicle and label it for compliance.

Vehicle Identification Number (VIN)

The chassis vehicle identification number (VIN) is permanently attached to the chassis. See **Fig. 1.4**.

NOTE: Always include the chassis serial number (last six digits of the VIN) when communicating with Freightliner Custom Chassis Corporation.

INCOMPLETE VEHICLE
IDENTIFICATION DATA

FREIGHTLINER®
A Subsidiary of FREIGHTLINER LLC

INCOMPLETE VEHICLE MANUFACTURED BY:
FREIGHTLINER CUSTOM CHASSIS CORPORATION
GAFFNEY, SOUTH CAROLINA 29341

INCOMPLETE VEHICLE DOM:

VIN:

GVWR/PNBV:
GAWR/PNBE:
FRONT =
WITH TIRES RIMS
PRESSURE = (COLD)
FIRST INTMD =
WITH TIRES RIMS
PRESSURE = (COLD)
REAR =
WITH TIRES RIMS
PRESSURE = (COLD)

VEHICLE TYPE:

MODEL:

NOTE: ALL WEIGHTS LISTED IN kg (lb)
PRESSURES LISTED IN kPa (psi)

OVERSPEEDING OR OVERLOADING WILL VOID WARRANTY. THE ABOVE DATA REPRESENTS ORIGINAL EQUIPMENT.

09/11/2002 f080123

Fig. 1.1, Vehicle Specification Label

CHASSIS–CAB MFD. BY VEHICLE ID NUMBER

THIS CHASSIS–CAB CONFORMS TO FEDERAL MOTOR VEHICLE SAFETY STANDARD NOS. 101,102,103,104,106,107,111,113,115,120,121,124,205,206,207,208,209,210,302.
THIS VEHICLE WILL CONFORM TO STANDARD NO.
IF IT IS COMPLETED IN ACCORDANCE WITH THE INSTRUCTIONS CONTAINED IN THE INCOMPLETE VEHICLE DOCUMENT FURNISHED PURSUANT TO 49CFR PART 568.
CONFORMITY TO THE OTHER SAFETY STANDARDS APPLICABLE TO THIS VEHICLE WHEN COMPLETED IS NOT SUBSTANTIALLY AFFECTED BY THE DESIGN OF THE CHASSIS–CAB.

09/28/98 f080023

Fig. 1.2, Incomplete Vehicle Certification Label, U.S.

1 2 3

MFRD BY
DATE
GVWR
VEHICLE ID NO

FRONT AXLE GAWR
FIRST INTERMEDIATE AXLE GAWR
SECOND INTERMEDIATE AXLE GAWR
THIRD INTERMEDIATE AXLE GAWR
REAR AXLE GAWR

THIS VEHICLE CONFORMS TO ALL APPLICABLE FEDERAL MOTOR VEHICLE SAFETY STANDARDS IN EFFECT ON THE DATE OF MANUFACTURE SHOWN ABOVE. VEHICLE TYPE CLASSIFICATION: TRUCK TRACTOR

11/21/96 f080053

1. Date of Manufacture: by month and year
2. Gross Vehicle Weight Rating: developed by taking the sum of all the vehicle's gross axle ratings
3. Gross Axle Weight Ratings: developed by considering each component in an axle system—including suspension, axle, wheels, and tires—and using the lowest component capacity as the value for the system

Fig. 1.3, Certification Label, U.S.

INCOMPLETE VEHICLE
COMPONENT INFORMATION

FREIGHTLINER®
A Subsidiary of FREIGHTLINER LLC

INCOMPLETE VEHICLE MANUFACTURED BY:
FREIGHTLINER CUSTOM CHASSIS CORPORATION
GAFFNEY, SOUTH CAROLINA 29341
INCOMPLETE VEHICLE DOM:
VIN:

USE VEHICLE ID NUMBER (VIN)
WHEN ORDERING PARTS.

CHASSIS MODEL:
ENGINE MODEL:
TRANS MODEL:
FRONT AXLE MODEL:
REAR AXLE MODEL:

WHEELBASE:
ENGINE NUMBER:
TRANS NUMBER:
FRT AXLE NUMBER:
REAR AXLE NUMBER:
REAR AXLE RATIO:

PAINT MFR:
PAINT NUMBER:

FOR COMPLETE PAINT INFORMATION
SEE VEHICLE SPECIFICATION SHEET.

FREIGHTLINER CUSTOM CHASSIS CORPORATION
GAFFNEY, SOUTH CAROLINA, USA

12/04/2001 f080122

Fig. 1.4, Vehicle Identification Number (VIN) Label, Typical

2

Driver Controls and Instruments

Instrument and Control Panel

Figure 2.1 represents a typical Freightliner dash equipped with all of the standard and many of the optional instruments and controls.

A warning and indicator light module, located below the speedometer and tachometer, houses all of the standard and optional warning and indicator lights. **Figure 2.2** identifies the warning and indicator lights.

Controls

Ignition Switch and Key

The ignition switch can be turned to four positions: ACCESSORY, OFF, ON, and START. See **Fig. 2.3**.

The key can be inserted and removed only from the OFF position. The headlights (low beams only), fog lights, turn signals, hazard warning lights, and the parking lights operate with the ignition switch in the OFF position, regardless of whether the key is inserted.

In the accessory (ACC) position (key is turned counterclockwise), all of the electric gauges operate.

Turn the key fully clockwise to the START position only when starting the engine. When the engine starts, release the key. When released, the key will rotate counterclockwise to the ON position.

In the ON position (key turned 45 degrees clockwise), all of the electrical systems are operable. Warning lights and the buzzer for low air pressure (if equipped with air brakes) and low oil pressure operate until the engine is started and minimum pressures build up.

Panel Light Control Lever

Turn on the panel lights with the headlight switch. The panel light lever controls the brightness of the instrument panel lights. Slide the control lever up to brighten the lights, and down to dim them. Move the control lever all the way down to turn them off. See **Fig. 2.4**.

Headlight Switch and Daytime Running Lights

In the down position all lights are off. Move the switch to the middle position to turn on the parking lights. Move the switch to the up position to turn on the headlights. See **Fig. 2.5**.

For vehicles built to operate in Canada, turn the ignition switch to the ON position and release the parking brake to automatically activate the low-beam headlights (later model vehicles) at half voltage as daytime running lights. The daytime running lights operate until the parking brake is applied, and then will switch off. Turning on the regular headlights overrides the daytime running

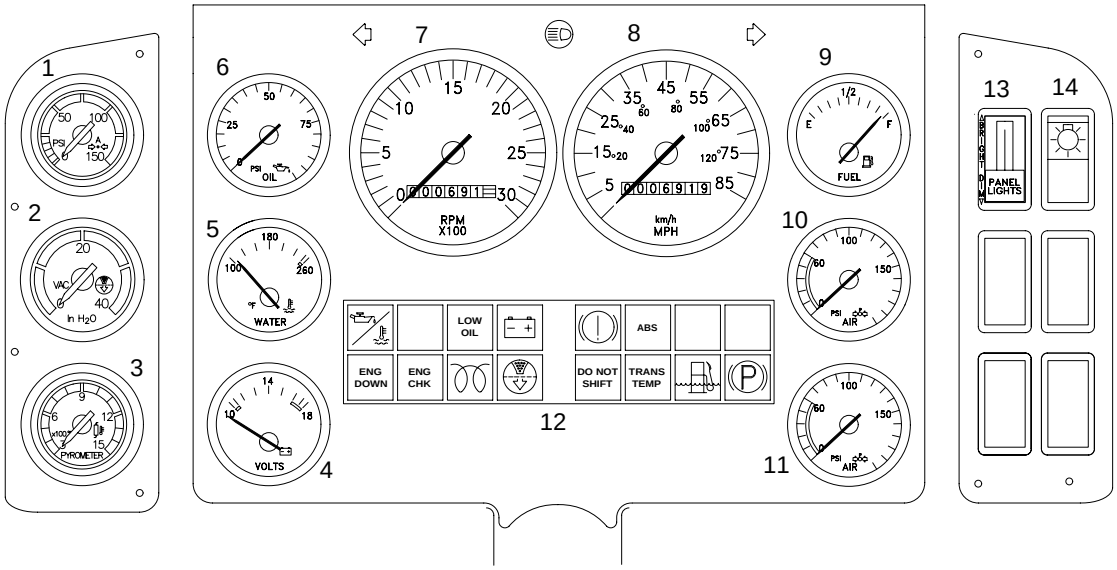

09/12/96 f601174

1. Application Air Pressure Gauge
2. Air Restriction Gauge
3. Pyrometer
4. Voltmeter
5. Water Temperature Gauge
6. Engine Oil Pressure Gauge
7. Tachometer
8. Speedometer
9. Fuel Gauge
10. Primary Air Pressure Gauge
11. Secondary Air Pressure Gauge
12. Warning and Indicator Light Module
13. Panel Light Control Lever
14. Headlight Switch

Fig. 2.1, Instrument and Control Panel Layout

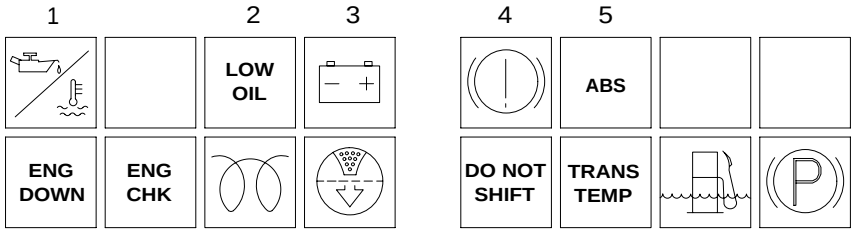

09/12/96 f601175

1. Low Oil Pressure/High Water Temperature Warning
2. Low Oil Level Warning
3. Alternator Warning Light
4. Brake System Warning
5. ABS Warning Light
6. Stop Engine Indicator
7. Engine Check Indicator
8. Cold-Start Manifold Heater Indicator
9. Air Cleaner Restriction Indicator
10. Do Not Shift Indicator
11. High Oil Temperature Warning (automatic transmission)
12. Water in Fuel/Water Separator Warning
13. Parking Brake Indicator Light

Fig. 2.2, Warning and Indicator Lights

lights. The vehicle cannot be driven unless either the headlights or the daytime running lights are activated.

Parking Brake Control Lever

Vehicles With Hydraulic Brakes

A parking brake control lever is located to the left of the steering column. To apply the parking brake, depress the brake pedal, then pull down on the parking brake lever. To release the parking brake, depress the brake pedal and pull the parking brake lever all the way up.

Turning the knob counterclockwise decreases the effort needed to move the lever.

If the parking brake does not hold the vehicle securely, depress the brake pedal and release the parking brake. Turn the knob on the end of the lever clockwise to increase the parking brake application.

NOTE: Turning the knob clockwise will also increase the effort needed to apply or release the parking brake lever.

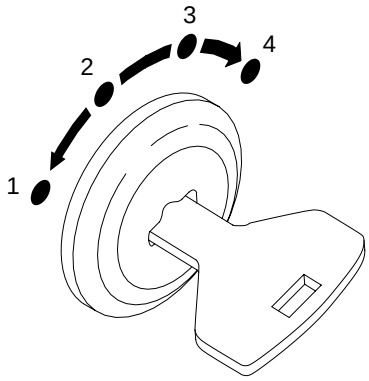

07/10/96 f601179

1. Accessory
2. Off
3. On
4. Start

Fig. 2.3, Ignition Switch

If the parking brake still doesn't hold the vehicle securely (after adjustment), check the parking brake linings for the correct thickness, or for contamination. For instructions, see **Group 42** of the *School Bus Chassis Maintenance Manual* if equipped with hydraulic brakes. If equipped with air brakes, see **Chapter 8** of this manual.

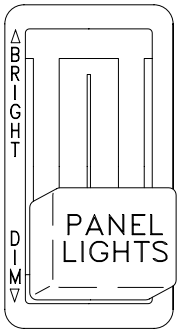

10/26/94 f600363a

Fig. 2.4, Panel Light Control Lever

Parking Brake Control Valve

Vehicles With Air Brakes

A diamond-shaped knob to the right of the control panel operates the parking brake control valve. When the knob is pulled out, the vehicle's spring parking brake is applied. When the knob is pushed in, the parking brake is released. Before the parking brake can be released, air pressure in the brake system must be at least 65 psi (447 kPa).

See **Chapter 7**, under the heading "Air Brake System," for instructions on how to use the parking brake valve.

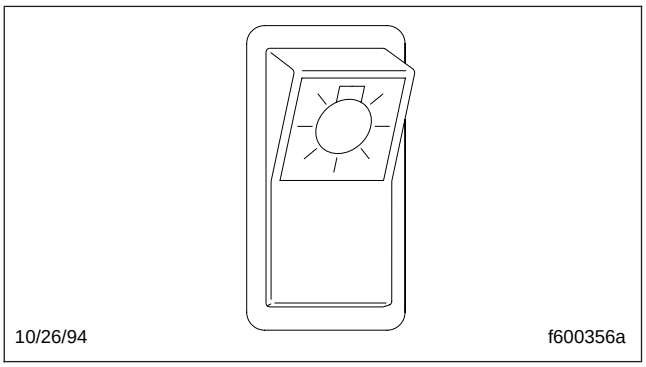

Fig. 2.5, Headlight Switch

Turn Signal Lever

The turn signal lever is mounted on the steering column. Push the lever counterclockwise to turn on the left-turn signal lights; push it clockwise to turn on the right-turn signal lights. When one of the signal lights is on, a green indicator light flashes at either the far left or far right of the warning and indicator light panel. When the turn is completed, the signal will cancel and the lever will return to the neutral position. See **Fig. 2.6**.

Hazard Warning Light Tab

The hazard warning light tab is located beneath the turn signal lever. Activate the hazard warning lights by pulling the tab out. When the hazard warning light tab is pulled out, all of the turn signal lights and both of the indicator lights on the control panel will flash. To cancel the warning lights, move the turn signal lever up or down, then return the lever to the neutral position. See **Fig. 2.6**.

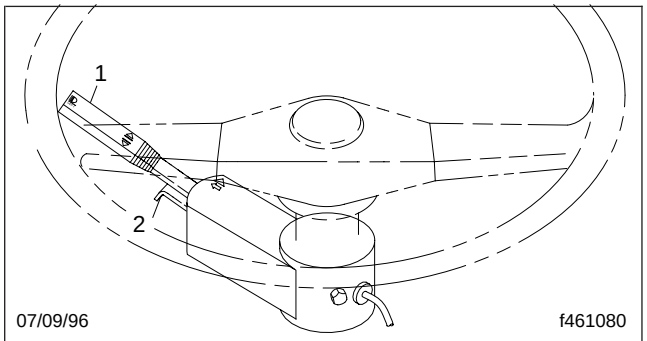

1. Turn Signal Lever
2. Hazard Warning Light Tab

Fig. 2.6, Turn Signal/Headlight Dimmer Switch and Hazard Warning Tab

Headlight Dimmer Switch

Pull the turn signal lever up to change from low-beam to high-beam headlights, or from high beams back to low beams. See **Fig. 2.6**. When the headlights are on

high beam, a blue indicator light comes on above the speedometer and tachometer.

NOTE: The ignition switch must be in the ON position for the high beams to work.

Allison Automatic Transmission Controls

Allison automatic transmissions have six shift positions on the selector lever. See **Fig. 2.7**. The selector lever is lighted for night driving. See **Chapter 5** for complete transmission operating instructions.

NOTE: Vehicles equipped with an Arens shift-by-wire shift control system have an electronic push-button selector similar to that described below for MD-series transmissions.

Allison automatic transmission models MD-CR and MD-WR are controlled by an electronic control unit (ECU). The ECU processes information from sensors, pressure switches, and the shift selector to automatically control the transmission according to programmed specifications. See **Fig. 2.8**.

Vehicles with these transmissions have a red do-not-shift light in the lens and bezel assembly. Also, there is a service light in the indicator panel on the shift selector. With the ignition switch in the ON position, both lights come on for a few seconds, then if there is no

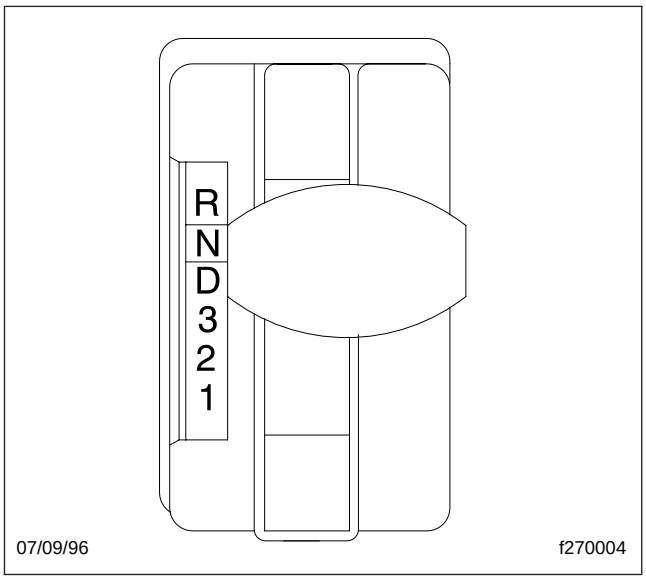

Fig. 2.7, Shift Selector

problem with the transmission system, the lights will go out. Whenever there is a problem with the transmission system, the lights will come on and stay on as long as the problem exists.

If "service" is displayed in the indicator panel, some features may not work, but the vehicle can still be driven. If

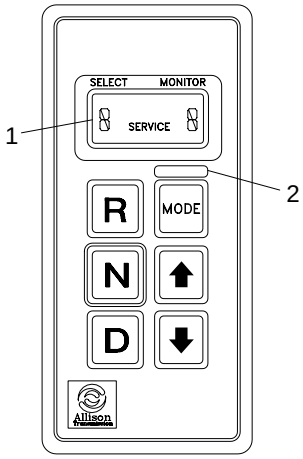

1. Indicator Panel 2. Mode ID

Fig. 2.8, MD Shift Selector

the do-not-shift light illuminates while driving (accompanied by eight short beeps from the shift selector), operating limits will be placed on the transmission, such as restricting upshifts and downshifts. However, the vehicle can still be driven to reach service assistance. In either situation, have the problem repaired as soon as possible. See the *Allison Transmission Service Manual* for troubleshooting procedures. See **Chapter 5** for complete transmission operating instructions.

Cruise Control

The cruise control allows you to automatically control the speed of the vehicle. The switches that operate the cruise control are located on the instrument panel.

WARNING

Do not use the cruise control system when driving conditions do not permit maintaining a constant speed, such as in heavy traffic or on roads that are winding, icy, snow covered, slippery, or with a loose driving surface. Failure to follow this precaution could cause a collision or loss of vehicle control, possibly resulting in personal injury or property damage.

CAUTION

Do not shift to Neutral (N) when using the cruise control. This will cause the engine to overspeed, which can damage the engine.

Use the Cruise ON/OFF switch on the instrument panel to turn the cruise control on or off. Use the SET/RESUME switch to select cruise speed or to resume cruise control after slowing down. See **Chapter 3**.

High Idle (with cruise control option)

Place the shift lever in Neutral (N). Press the ON/OFF switch on the instrument panel. Accelerate to the desired rpm. Press and release the SET/RESUME switch. To disengage high idle, step on the brake pedal or move the ON/OFF switch to the OFF position.

Tilt/Telescope Steering Column (optional)

The optional tilt/telescope steering column is actuated by a control lever on the steering column.

The optional tilt-only steering column is actuated by either a control lever on the steering column or a foot-operated control valve located to the left of the clutch or brake pedal.

Electric Horn

To sound the electric horn, push the button in the center of the steering wheel.

Warning and Indicator Lights

All of the standard and optional warning and indicator lights are housed in a lens and bezel assembly, located below the speedometer and tachometer.

Standard indicator lights include:

- The green right- and left-turn signal lights, that flash on and off whenever the outside turn signal lights are flashing.
- The blue high-beam indicator light (located above the speedometer and tachometer), that comes on when the headlights are on high beam.
- The red parking brake indicator light, that comes on when the parking brake is applied and the ignition switch is in the ON position. See **Fig. 2.9**.

Standard Warning System

Standard Warning Lights

Standard red warning lights are for alternator no-charge, and the brake system warning. See **Fig. 2.9**. Whenever conditions cause the brake system warning light to come on, a warning buzzer also alerts the driver.

On hydraulic brake systems, the warning light comes on and the buzzer sounds when the fluid level is low, or whenever there is a fluid pressure problem within the master cylinder.

The oil pressure warning light and buzzer activate whenever the oil pressure falls below the minimum oil pressure recommended by the engine manufacturer. See **Fig. 2.9**.

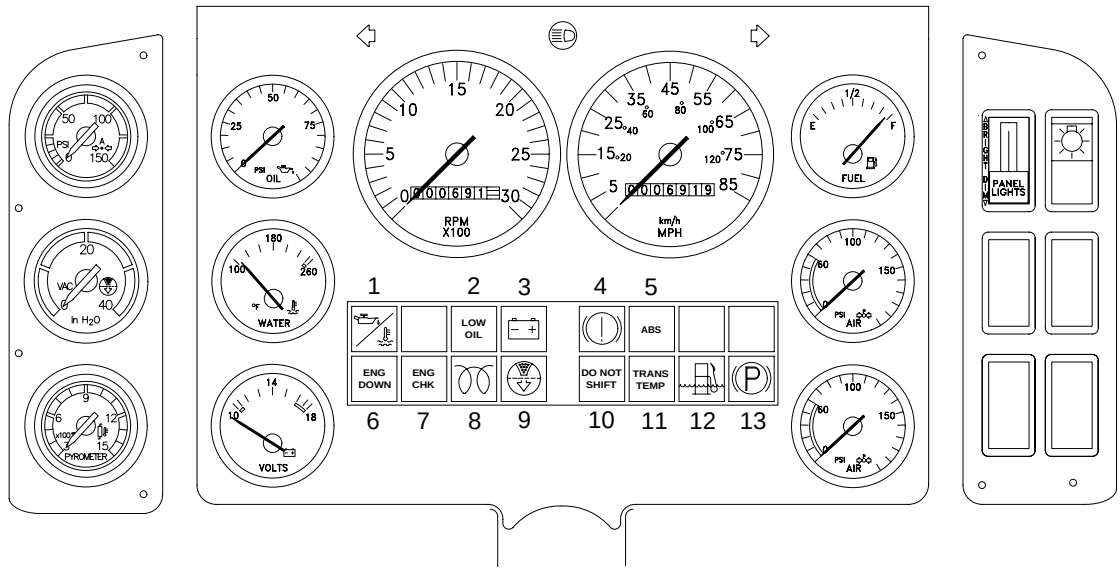

09/12/96 f601176

1. Low Oil Pressure/High Water Temperature Warning
2. Low Oil Level Warning
3. Alternator Warning Light
4. Brake System Warning
5. Antilock Braking System (ABS) Warning Light
6. Stop Engine Indicator
7. Engine Check Indicator
8. Cold Start Manifold Heater Indicator
9. Air Cleaner Restriction Indicator
10. Do Not Shift Indicator
11. High Oil Temperature Warning (automatic transmission)
12. Water in Fuel/Water Separator Warning
13. Parking Brake Indicator Light

Fig. 2.9, Warning and Indicator Lights

See the engine manufacturer's manual for minimum oil pressure levels.

The water temperature warning light and buzzer activate whenever the engine coolant temperature exceeds a preset point determined by the engine manufacturer. See **Fig. 2.9**.

See the engine manufacturer's manual for maximum water temperature levels.

Optional Warning and Indicator Lights

CAUTION

The vehicle may be programmed for the engine to derate and eventually shut down if there is a loss of oil pressure or if coolant temperature becomes too high. This protects the engine from damage. Under these conditions, first the check engine light will come on. If the driver continues to drive the vehicle, the engine derate or shut down light will come on and the engine will start to power down or derate. Eventually the engine will shut down. Be aware that the vehicle could derate and/or shut down if this option is programmed. Be prepared to park the vehicle in a safe location if it does derate or shut down.

Optional warning and indicator lights may include: air intake warmer, transmission oil temperature, air cleaner restriction, check engine, and engine shutdown.

When the ignition switch is turned to the ON position, oil and brake system warnings (as equipped) activate until the engine starts and minimum pressures are exceeded. If the low oil pressure warning light or brake system warning light remains on after running the engine for 15 seconds, shut down the engine and determine the cause of the problem. See the *School Bus Chassis Workshop Manual* for repair procedures.

IMPORTANT: If the warning system does not activate when the ignition switch is turned to the ON position, repair the system to provide warning protection for oil pressure, coolant temperature, and the brake system.

Instruments

Tachometer (optional)

A tachometer indicates engine speed in revolutions per minute (rpm), and serves as a guide for shifting the transmission and keeping the engine in the appropriate rpm range. See **Fig. 2.10**. For low idle and rated rpm, see the engine identification plate.

The tachometer may include an engine hourmeter. An engine hourmeter records continuous operating hours of

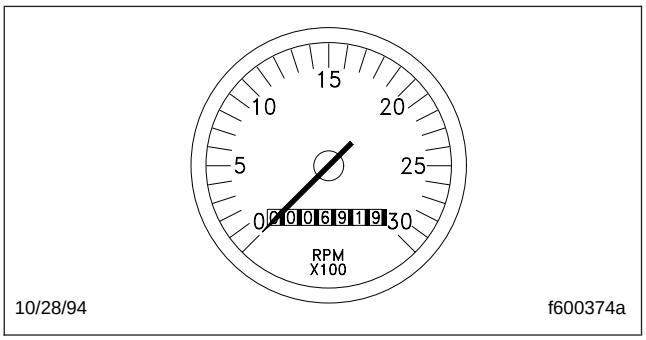

Fig. 2.10, Tachometer

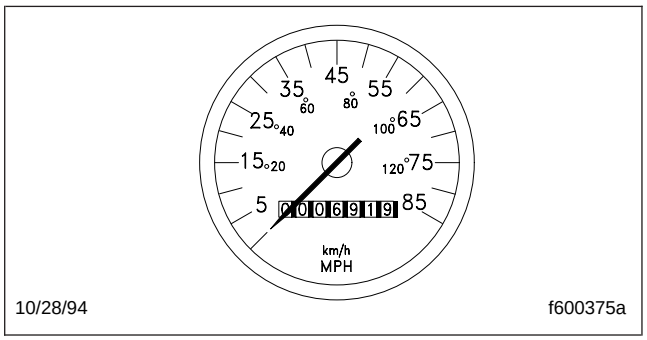

Fig. 2.11, Speedometer

the engine. In cases where actual mileage does not indicate overall usage, maintenance and lubrication intervals for the engine and engine-operated equipment can be determined by operating hours.

Speedometer

A speedometer registers vehicle speed in both miles per hour (mph) and kilometers per hour (km/h). Standard speedometer gauges are equipped with an odometer that records total distance traveled in either miles or kilometers. See **Fig. 2.11**.

Water Temperature Gauge

During normal engine operation, the water temperature gauge should read from 175 to 203°F (79 to 95°C). See **Fig. 2.12**. If the temperature remains below 160°F (71°C) or exceeds a maximum temperature of 210°F (99°C), inspect the cooling system to determine the cause. See the *School Bus Chassis Workshop Manual* for troubleshooting and repair procedures.

Engine Oil Pressure Gauge

See the engine manufacturer's manual for recommended engine oil pressure gauge readings. See **Fig. 2.13**.

CAUTION

A sudden decrease or absence of oil pressure may indicate mechanical failure. Bring the vehicle to a

safe stop and investigate the cause to prevent further damage. Do not operate the engine until the cause has been determined and corrected.

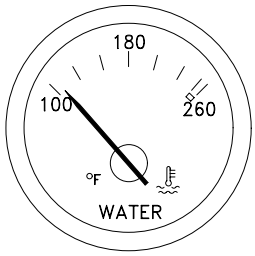

10/28/94 f600376a

Fig. 2.12, Water Temperature Gauge

Voltmeter (optional)

The voltmeter indicates the vehicle charging system voltage when the engine is running and the battery voltage when the engine is stopped. See **Fig. 2.14**. By monitoring the voltmeter, the driver can be aware of potential charging system problems and have them repaired before the batteries discharge enough to create starting difficulties.

The voltmeter will normally show approximately 13.7 to 14.1 volts when the engine is running. The voltage of a fully charged battery is 12.7 to 12.8 volts when the engine is stopped. A completely discharged battery will produce only about 12.0 volts. The voltmeter will indicate lower voltage as the vehicle is being started or when electrical devices in the vehicle are being used.

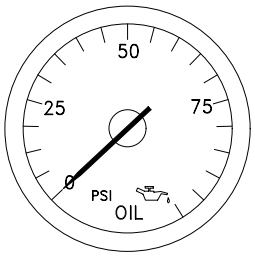

10/28/94 f600377a

Fig. 2.13, Engine Oil Pressure Gauge

If the voltmeter shows an undercharged or overcharged condition for an extended period, have the charging system and batteries checked at a repair facility.

NOTE: On a vehicle equipped with a battery isolator system, the voltmeter measures the average voltage of all of the batteries when the engine is running. When the engine is stopped, the voltmeter shows only the gel cell battery voltage and does not indicate the voltage of the engine-starting batteries.

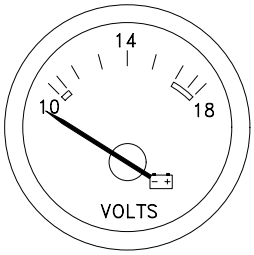

10/28/94 f600378a

Fig. 2.14, Voltmeter

CAUTION

Gel cell batteries can be damaged if the battery voltage is allowed to drop below 12.0 volts or if the charging voltage is more than 14.1 volts. Start the engine to recharge the gel cell before the battery becomes fully discharged. If an external charger is needed, disconnect the gel cell battery and use only an external battery charger that has been approved for gel cell batteries.

Fuel Gauge

The fuel gauge indicates the amount of fuel in the fuel tank(s). See **Fig. 2.15**.

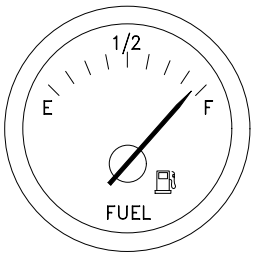

10/28/94 f600380a

Fig. 2.15, Fuel Gauge

Transmission Oil Temperature Gauge (optional)

With an Allison automatic transmission, the transmission oil temperature gauge reading should not exceed 300°F (149°C) during normal operation. A warning light will illuminate to alert the driver if normal operating temperatures are exceeded.

CAUTION

A sudden increase in transmission oil temperature that is not caused by a load increase may indicate mechanical failure. Bring the vehicle to a safe stop,

and investigate the cause to prevent further damage. Do not operate the vehicle until the cause has been determined and corrected.

Intake-Air Restriction Indicator

An intake-air restriction indicator measures the vacuum on the engine side of the air cleaner at the air cleaner outlet. See **Fig. 2.16**. If the yellow signal stays locked at or above the values shown in **Table 2.1** after the engine is shut down, service the air cleaner. Then, press the yellow button to reset the indicator.

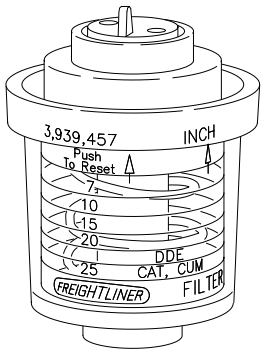

01/18/95 f600148a

Fig. 2.16, Intake-Air Restriction Indicator

Maximum Air Restriction in Inches of Water (inH_2O)		
Engine	**At Full Load and Governed RPM**	**At No-Load and Governed RPM**
Caterpillar	25 (63 cm)	12 (30 cm)
Cummins	25 (63 cm)	12 (30 cm)
Mercedes-Benz	25 (63 cm)	12 (30 cm)

Table 2.1, Maximum Air Restriction in Inches of Water (in H_2O)

NOTE: Rain or snow can wet the filter and cause a higher than normal reading temporarily.

Intake-Air Restriction Gauge

The intake-air restriction gauge measures the vacuum on the engine side of the air cleaner at the air cleaner outlet. See **Fig. 2.17** and **Fig. 2.18**. Vacuum is measured in inH_2O (inches/centimeters of water). When the vacuum reading in normal operation equals the applicable level shown in **Table 2.1**, the air cleaner needs to be serviced.

IMPORTANT: Do not rely exclusively on the accuracy of the air restriction gauge for filter replacement. The filter must be changed at recommended intervals regardless of what the gauge reads.

NOTE: Rain or snow can wet the filter and cause a higher than normal reading temporarily.

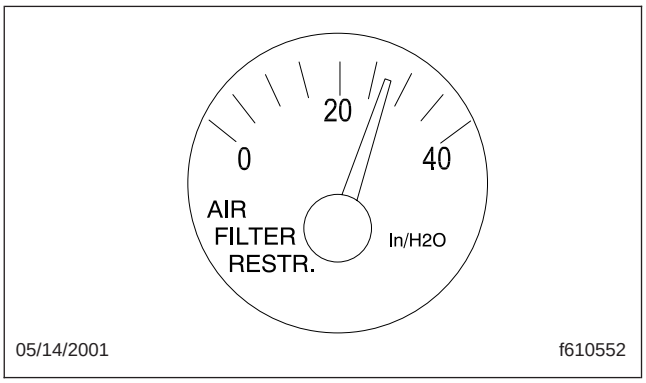

Fig. 2.17, Intake-Air Restriction Gauge (inH_2O)

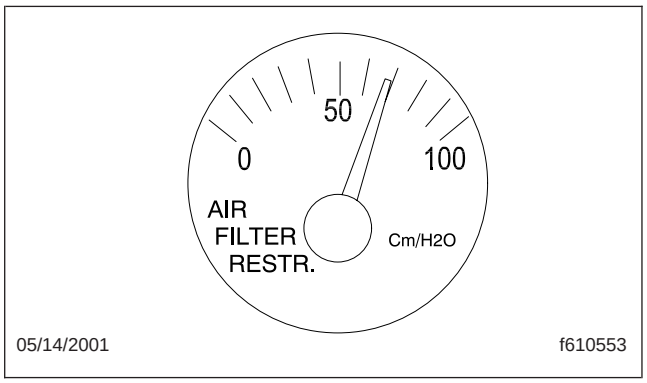

Fig. 2.18, Intake-Air Restriction Gauge (cm H_2O)

Instrumentation Control Unit, Level III

The level III instrumentation control unit (ICU2M) is an advanced programmable electronic dashboard. It can accept information from the sensors and electronic control units installed on the vehicle and feed it to electronic gauges. Only air gauges operate mechanically.

There can be up to 14 removable gauges on the driver's instrument panel (11 electronic, one electromechanical, and two mechanical).

The Driver Message Center is the heart of the level III ICU. It has three parts:

- a set of 18 warning and indicator lights similar to those found on a conventional lightbar
- a 10-key keypad on the auxiliary instrument panel
- a message display screen

The message display screen is a 2-line by 20-character vacuum fluorescent display that provides a wide range of information to the driver.

Some of the information that can be provided by the message center includes:

- odometer readings
- outside air temperature

- trip information, such as trip miles and hours, idle hours, average mph, and leg miles and hours
- fuel information, such as fuel used, miles per gallon, and fuel used idling
- engine information, such as miles, hours, and gallons of fuel used
- diagnostic information, such as listings of active faults and troubleshooting information
- vehicle information, such as datalink operation and use data, dash part number, and software number

Some of the advanced features supported by the level III ICU are: Fuel Use Efficiency Level (FUEL) system display, target miles per gallon (MPG), and brightness control.

Fuel Use Efficiency Level (FUEL)

If so equipped, the FUEL system continuously monitors fuel usage efficiency and instantly transmits action messages through the Driver Message Center to help the driver get better mileage. The system may suggest a different speed, gear, or throttle position, and will calculate and transmit estimated fuel savings based on the suggested action. It also calculates and displays a bar graph that shows a fuel efficiency score as a percentage of optimum efficiency.

The messages this system displays are:

- "Drive 60 MPH, Gain X MPG"
- "Shift to Next Gear, Gain X MPG"
- "End Idling, Save X Gal/Hr"
- "Drive Steady Speed, Gain X MPG"
- "Move Throttle Slower, Gain X MPG"

In each example, the X value in the statement is variable. The system will estimate and display a numerical savings gain in place of the X.

NOTE: The information provided by the FUEL efficiency system is different than, and should not be confused with, the information available by pressing the FUEL key on the 10-key keypad. The keypad and its direct access keys are described in more detail later in this chapter.

Target MPG

The target MPG feature allows quick and easy checking of fuel economy through the "MPG Graph/Target MPG..Odometer" screen. See **Fig. 2.19**.

NOTE: Use the LEFT ARROW key to lower the target MPG, and the RIGHT ARROW key to raise it. For more information on how to set target MPG,

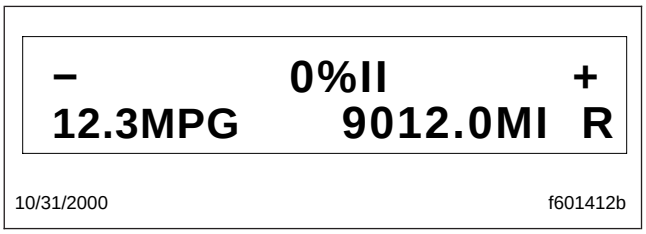

Fig. 2.19, MPG Graph/Target MPG.Odometer Screen

adjust screen display brightness, change languages or switch between US and metric units of measure, see "Setup Information" later in this chapter.

The "Target MPG" area is on the second line of the display, to the left of the odometer. It shows the actual target miles per gallon (MPG).

Example: A reading of "12.3 MPG" indicates that the target MPG is 12.3 miles per gallon.

The "MPG Graph" on the first line of the display gives the same information in dynamic form. The "0%" mark in the center of the line gives the target MPG. Bars showing to the right of the display indicate that short term fuel economy is above the target; bars showing to the left of the display indicate that short term fuel economy is below the target.

Brightness Control

The panel light dimmer switch normally controls the brightness of all panel and gauge lights, including the level III ICU message display screen. With the parking brake set, the ICU keypad can control the brightness of the message display screen independently of the other lights. If the panel lights are set to maximum brightness, the message display screen cannot be brightened any further.

NOTE: Use the LEFT ARROW key to dim the message display screen, and the RIGHT ARROW key to brighten it. For more information on how to set the brightness of the message display screen, see "Setup Information" later in this chapter.

When the parking brake is released, the arrow keys no longer work to change the brightness of the message display screen, but the settings stay in effect unless the headlights are turned on. With the headlights on, the message display screen dims slightly to adjust to nighttime conditions.

Warning and Indicator Lights

There can be up to 18 warning and indicator lights installed in the level III ICU. See **Fig. 2.20**.

- The green right- and left-turn signal lights flash on and off whenever the outside turn signal lights are flashing.

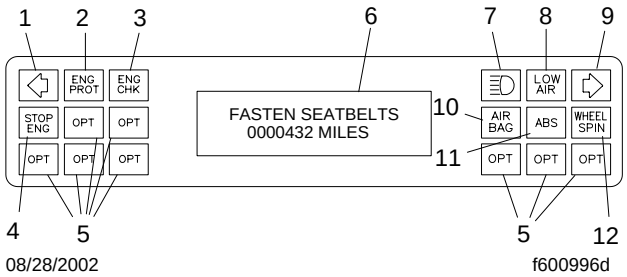

Typical installation shown. Location and function of optional lights may vary.

1. Left-Turn Indicator
2. Engine Protection Warning Lamp Indicator
3. Check Engine Indicator
4. Stop Engine Warning
5. Optional Indicator
6. Message Display Screen
7. High-Beam Indicator
8. Low Air Warning
9. Right-Turn Indicator
10. Air Bag Warning (optional)
11. ABS Warning
12. Wheel Spin Indicator

Fig. 2.20, Driver Message Center, Level III ICU

- The blue high-beam indicator light comes on when the headlights are on high beam.
- The yellow "Check Engine" (CHK ENG) light comes on to indicate an engine condition such as low coolant level, high coolant temperature, or low oil pressure. It also comes on when a fault is detected or recorded.
- The red "Engine Protection" (ENG PROT) light comes on to warn that the protection system available on the engine has been activated.
- Installed on Cummins engines only, the red "Stop Engine" (STOP ENG) light comes on to warn that the engine is not functioning normally. Pull the vehicle over to the side of the road and shut down the engine immediately.
- The red low air pressure (LOW AIR) warning light and buzzer come on whenever air pressure in the primary or secondary air reservoir falls below 64 to 76 psi (440 to 525 kPa).
- Depending on options installed, other warning and indicator lights can be installed in the spaces marked "OPT." Available optional indicator lights include: air bag warning, alternator no charge warning, automatic transmission overheat warning, trailer ABS warning, ECAS (electronic suspension) transfer indicator, and ECAS failure warning.

NOTE: The functions of the ABS warning light are explained under "Meritor WABCO Antilock Braking System (ABS)" in **Chapter 7**.

Keypad

The level III ICU is controlled by a keypad located on the auxiliary dash panel. See **Fig. 2.21**. This keypad, which has 10 keys, can be used to:

- Call up information onto direct access screens.
- Move about from screen to screen while the vehicle is stationary.
- Set up the display.

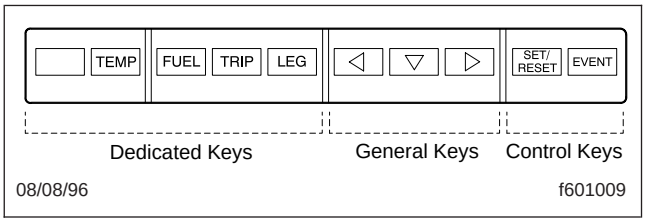

Fig. 2.21, 10-Key Keypad

- Set a target MPG to monitor fuel economy while driving. Press the LEFT ARROW key to lower the target MPG and the RIGHT ARROW key to raise it.
- Set the brightness of the message display screen independently of the panel dimmer switch. Use the LEFT ARROW key to dim the display and the RIGHT ARROW key to brighten it.
- Record significant data using the EVENT key (optional—if a data logging unit is installed).

NOTE: One key is blank and is not usable at this time.

Level III ICU Ignition Sequence

If the headlights are turned on, the screen displays the odometer and waits for the ignition switch to be turned to the ON position.

When the ignition switch is first turned to the ON position, all of the electronic gauges complete a full sweep of their dials, the warning and indicator lights light up for five seconds, and the buzzer sounds for two seconds. See **Fig. 2.22**.

NOTE: The air gauges and voltmeter do not sweep.

Once the ignition switch has been turned to the ON position, the screen displays the "Freightliner" message. At the same time, the level III ICU conducts a roll call of all of the electronic control units (ECUs) installed on the vehicle, looking for active faults.

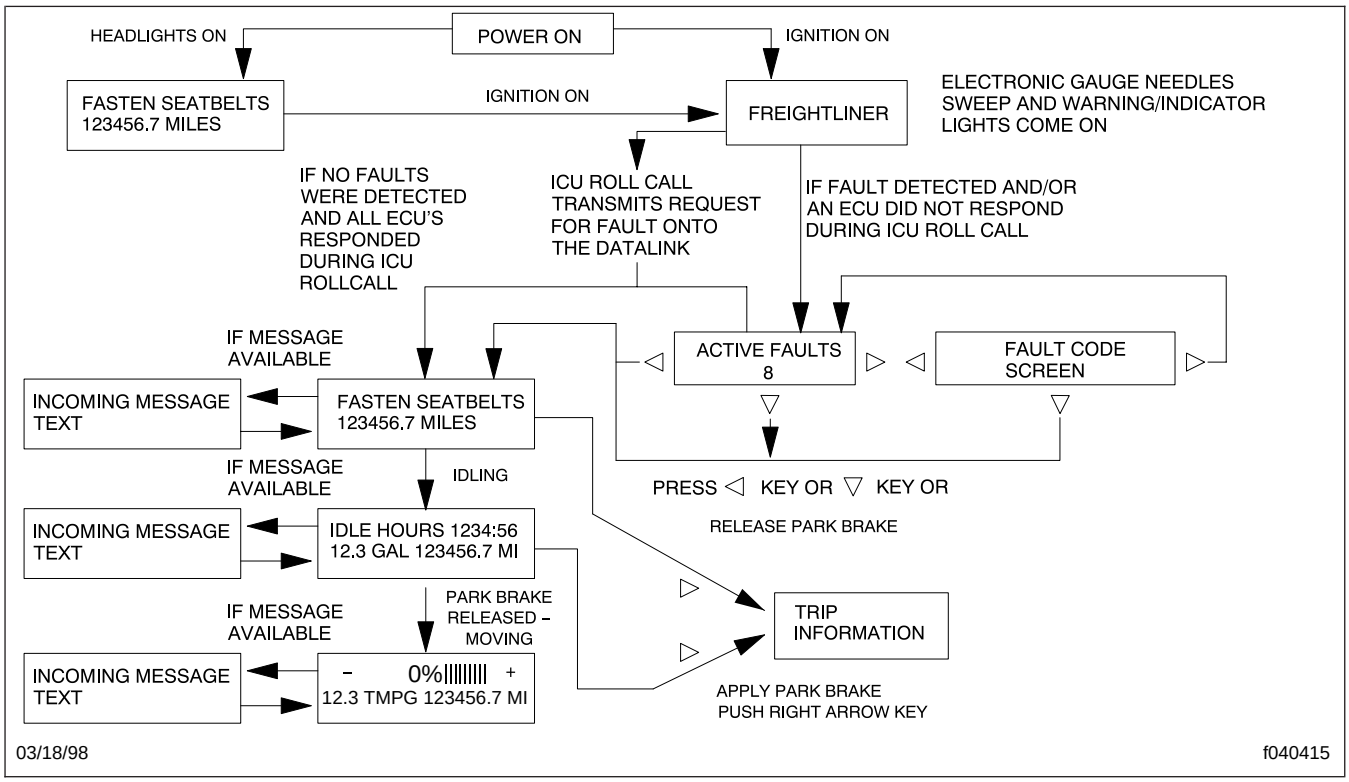

Fig. 2.22, Ignition Sequence, Level III ICU

If there are no active faults, the screen displays the "Fasten Seat Belts/Odometer" screen.

If, however, the level III ICU has received active fault codes or an electronic control unit (ECU) fails to respond to the roll call, it shows the "Active Faults" screen and displays the number of active faults up to a total of eight. If desired, press RIGHT ARROW to see the active fault codes. See **Fig. 2.19**. Continuing to press the right arrow key will display all additional fault codes (if any).

To go on, press LEFT ARROW, or if the engine is running, release the parking brake to go on to the "Fasten Seat Belts/Odometer" screen.

Unless the engine is running, the ignition sequence ends with the "Fasten Seat Belts/Odometer" screen.

IMPORTANT: At this point, if the vehicle has a communications system and an incoming message is available, it will be displayed. To dismiss the incoming message, press any key on the keypad.

With the engine idling (the vehicle not moving), the ignition sequence cycles on, and displays the "Idle Hours/ Idle Gallons..Odometer" screen. See **Fig. 2.23**.

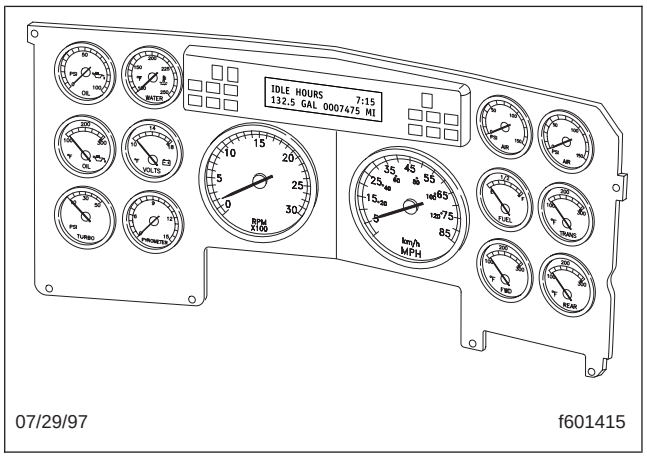

Fig. 2.23, Level III ICU at the End of the Ignition Sequence

The Message Display Screen

To understand the information displayed on the message display screen, here is an example of screen layout. On the "Idle Hours/Idle Gallons..Odometer" screen, idle hours are displayed on the top line with the words "Idle Hours" on the left side of the screen and the number of hours on the right. On the bottom line, the number of idle gallons is on the left and the odometer miles are on the right, with a space in between. See **Fig. 2.24**.

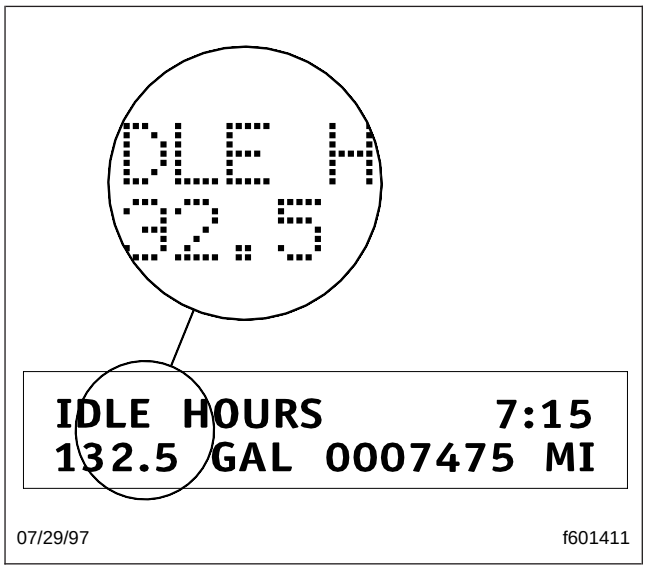

Fig. 2.24, Idle Hours/Idle Gallons..Odometer Screen

Once the parking brake is released (whether the vehicle is moving or not), the regular message screen display is the "MPG Graph/Target MPG..Odometer" screen. The MPG graph is a dynamic display graph demonstrating how the actions of the driver affect fuel economy. The graph moves to the right as fuel economy improves. See **Fig. 2.19**.

NOTE: Press the LEFT ARROW key to lower the target MPG and the RIGHT ARROW key to raise it. For more information on how to set the target MPG, see "Setup Information" later in this chapter.

Level III ICU Roll Call

Each time that the ignition switch is turned to the ON position, the level III ICU roll call function requests data from each ECU on the databus. If the ECU does respond to this request, the databus is communicating with that ECU and no fault code is displayed.

NOTE: Each ICU is configured to receive responses from a list of selected ECUs as installed on that particular vehicle.

If the ECU does not respond to this request, the level III ICU displays an active fault code that indicates that the databus is not communicating with that ECU. For a sample fault code and message of this type, see **Fig. 2.25**.

Level III ICU Odometer

The level III ICU odometer is a seven-digit display with one decimal point after the sixth digit allowing it to display tenths of miles (or kilometers).

When first installed, the odometer starts at 0.0 miles (or kilometers). When replaced, the odometer does not

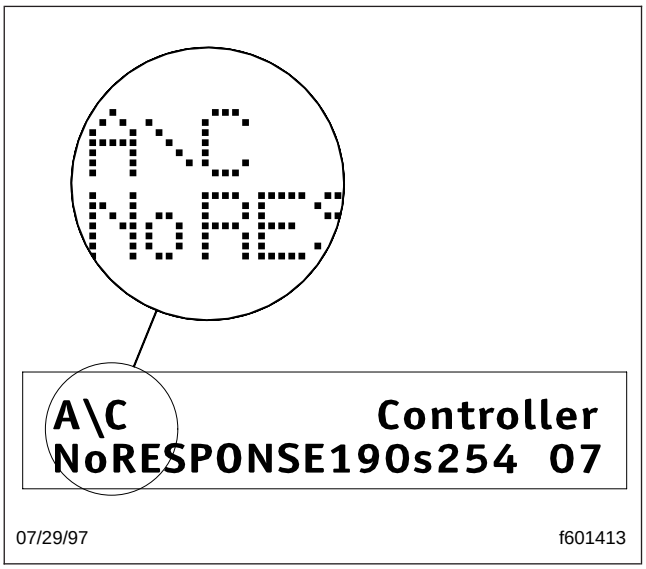

Fig. 2.25, Level III ICU Roll Call Fault Code and Message

start with the engine miles but starts again from 0.0 and cannot be changed up or down.

IMPORTANT: Although the odometer uses data supplied by the engine ECM to update its count, it keeps its own mileage starting from the zero point, which marks where it was first installed.

Alert Screens

Alert screens appear whenever a condition requiring an alert occurs. They appear when the vehicle is moving; they override the regular screen display. They are warnings, cautions, or other messages that require the driver's attention, but not all of them are critical to the operation of the vehicle. Warning messages always display at full brightness.

More important messages take priority over less important messages. The order of importance, or priority, is:

1. Eaton VORAD Warnings (if so equipped)
2. Parking Brake On (with the vehicle moving)
3. Low Oil Pressure, High Coolant Temperature, Low Coolant Level, and Low Voltage
4. Alternate Speedometer
5. Recirc Mode Engaged, and Provide Fresh Air
6. Low Fuel Level
7. Turn Signal On
8. Service Warnings
9. No Datalink Activity

"Parking Brake On" Screen

This warning message and alarm tone come on whenever the parking brake is applied and the vehicle is

moving faster than 2.5 miles per hour or the clutch has been depressed. The word "Warning" flashes on the message display screen above the message "Parking Brake On." The screen and alarm tone go away only when the parking brake is released. See **Fig. 2.26**.

Fig. 2.26, Parking Brake On Screen

The "Parking Brake On" screen overrides any other screen message.

"Low Oil Pressure" Screen

This warning message and alarm tone come on whenever the oil pressure falls below the minimum oil pressure specified by the engine manufacturer, whether the vehicle is idling or in motion. The word "Warning" flashes on the message display screen above the message "Low Oil Pressure." To dismiss the message, press any key on the keypad.

NOTE: If there is more than one alert message to display, pressing any key takes you to the next message, and so on until all of the messages have been received.

If low oil pressure is detected during the ignition sequence, it displays as an active fault and the alert screen does not appear.

After 30 seconds, this message displays again and can be dismissed as before by pressing any key.

"Low Coolant Level" Screen

This warning message and alarm tone activate whenever the coolant level falls below a preset point. The word "Warning" flashes on the message display screen above the message "Low Coolant Level."

This message follows the same rules of dismissal and display as "Low Oil Pressure."

"High Coolant Temp" Screen

This message and alarm tone come on whenever the engine coolant temperature exceeds a preset point specified by the engine manufacturer (see the engine manual for this temperature). The word "Warning" flashes on the message display screen above the message "High Coolant Temp."

This message follows the same rules of dismissal and display as "Low Oil Pressure."

"Low Voltage" Screen

On some vehicles, this message and alarm tone come on whenever a low voltage condition is detected by the instrumentation control unit. The word "Warning" flashes on the message display screen above the message "Low Voltage."

This message follows the same rules of dismissal and display as "Low Oil Pressure."

"Faulty Speedo Gauge" Screen

This message is displayed when the system detects a faulty speedometer. This becomes the default screen, and vehicle speed is displayed as a digital readout at the bottom left of the screen. All other screens and functions operate normally.

"Recirc Mode Engaged" and "Provide Fresh Air" Screens

The "Recirc Mode Engaged" screen comes on whenever recirculated air is selected on the fresh/air recirculation switch or the air circulation switch is rotated to the maximum air conditioning position. It displays one time only for seven seconds. It notifies the driver that recirculated air is being used and that fresh air needs to be provided after 20 minutes.

If fresh air is not provided after 20 minutes, the "Provide Fresh Air" message is displayed. It displays for seven seconds every 254 seconds (about every four minutes) until the driver switches to fresh air, either by selecting fresh air on the fresh/air recirculation switch or by rotating the air circulation switch away from maximum air conditioning and to one of the other positions.

"Low Fuel Level" Screen

Fuel level is continuously monitored by the ICU. When the fuel level drops to 1/8th full the word "Warning" flashes on the message display screen above the message "Low Fuel Level."

"Turn Signal On" Screen

This warning message (the alarm tone is optional) comes on whenever the turn signal remains on beyond a preset time or distance traveled. The word "Warning" flashes on the display screen above the message "Turn Signal On."

To dismiss this message, either turn off the turn signal or press any key on the keypad.

Service Warnings

Service warning screens display during the ignition sequence and indicate that a service interval has been reached or exceeded, and that maintenance is required. The messages may indicate the number of miles or hours until the next service, or, once passed, the number of miles or hours ago that maintenance should have

been performed. The messages read "X Miles To Next Service," "X Hours To Next Service," "Service Was Due X Mi Ago," and "Service Was Due X Hr Ago." The letter X represents the number of miles or hours programmed. The ICU2M can be programmed using ServiceLink to generate service warnings in either miles or hours, but not both.

"No Datalink Activity" Screen

The "No Datalink Activity" screen comes on whenever the datalink is not receiving data.

If the condition persists, take the vehicle in for service as soon as possible to discover the cause of the problem.

Direct Access Screens

The driver can also override the regular screen display at any time by pressing the keypad to display one of the direct access screens.

- Press the TRIP key for the "Trip Miles and Trip Hours" screen.
- Press the FUEL key for the "Fuel Used and Average MPG" screen.
- Press the LEG key for the "Leg Miles and Leg Hours" screen.

Data for each of the above screens can be reset (cleared). To reset, display the screen and push the Set/Reset key twice within six seconds (a confirmation screen will display after you press the key once).

NOTE: Resetting "Trip Miles and Hours" also resets "Leg Miles and Hours."

Press the TEMP key to display the outside air temperature.

If the vehicle has a data logging unit, press the EVENT key to record data about a significant driving event (engine problem, driving problem, unusual vehicle operation, etc.). Normally, the screen displays "Data Being Recorded."

NOTE: If the memory in the data logger is full, the screen instead displays "Memory Full/Data Not Recorded." If the data logger is not connected or not responding, the screen displays "Data Recorder/Not Responding." If the EVENT key was pressed recently (within the last two minutes), the screen displays "Still Recording/Last Event."

Stationary Access Screens—Used With Parking Brake Applied

The stationary access screens are a series of informational displays that give trip, fuel, engine, diagnostic, setup, and vehicle information.

For reasons of safety, stationary access screens can be seen only when the vehicle is not moving and the parking brake is applied.

Each set of stationary access screens has a title screen followed by one or more data screens. To move forward and backward through these screens, use the three arrow keys as shown in **Fig. 2.27**, **Fig. 2.28**, and **Fig. 2.29**.

Trip Information

Trip information provides three data screens: "Trip Miles and Hours," "Idle Hours and Average MPH," and "Leg Miles and Hours." See **Fig. 2.27**.

"Trip Miles and Hours" displays the number of miles and hours driven since the start of the trip. At the start of a trip, press RESET (SET/RESET twice) to set trip miles and hours back to zero.

NOTE: Resetting "Trip Miles and Hours" also resets "Idle Hours and Average MPH."

"Idle Hours and Average MPH" displays the hours spent idling and the average miles per hour.

"Leg Miles and Hours" records the number of miles and hours driven since the start of the leg. At the start of a new leg, press RESET to set leg miles and hours back to zero.

NOTE: Resetting "Trip Miles and Hours" also resets "Leg Miles and Hours."

Fuel Information

Fuel information provides two data screens: "Fuel Used and Average MPG" and "Idle Gallons and PTO Gallons." See **Fig. 2.27**.

"Fuel Used and Average MPG" displays the gallons of fuel used since the last reset. At the start of a trip, after refueling, or whenever desired, press RESET (SET/RESET twice) to set fuel used and average miles per gallon back to zero.

NOTE: Resetting "Trip Miles and Hours" does not also reset "Fuel Used and Average MPG" or "Idle Gallons and PTO Gallons." Fuel Information must be reset separately.

"Idle Gallons and PTO Gallons" displays the gallons of fuel used idling and to operate the Power Take Off unit (if installed). At the start of a trip or whenever desired, press RESET to set idle gallons and PTO gallons back to zero.

Engine Information

Engine information provides two data screens: "Engine Miles and Hours," and "Engine Gallons and PTO Gallons." See **Fig. 2.27** or **Fig. 2.28**.

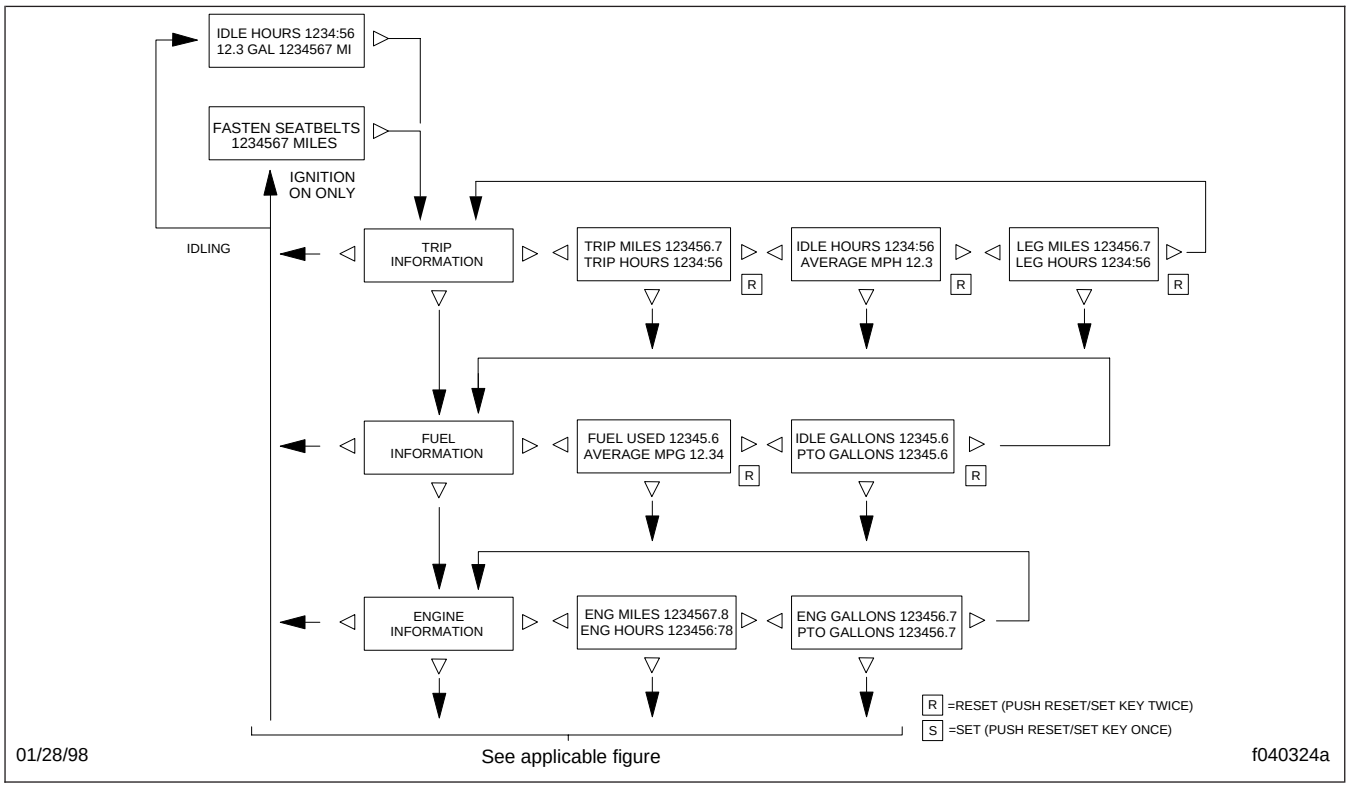

Fig. 2.27, Trip Information, Fuel Information, and Engine Information

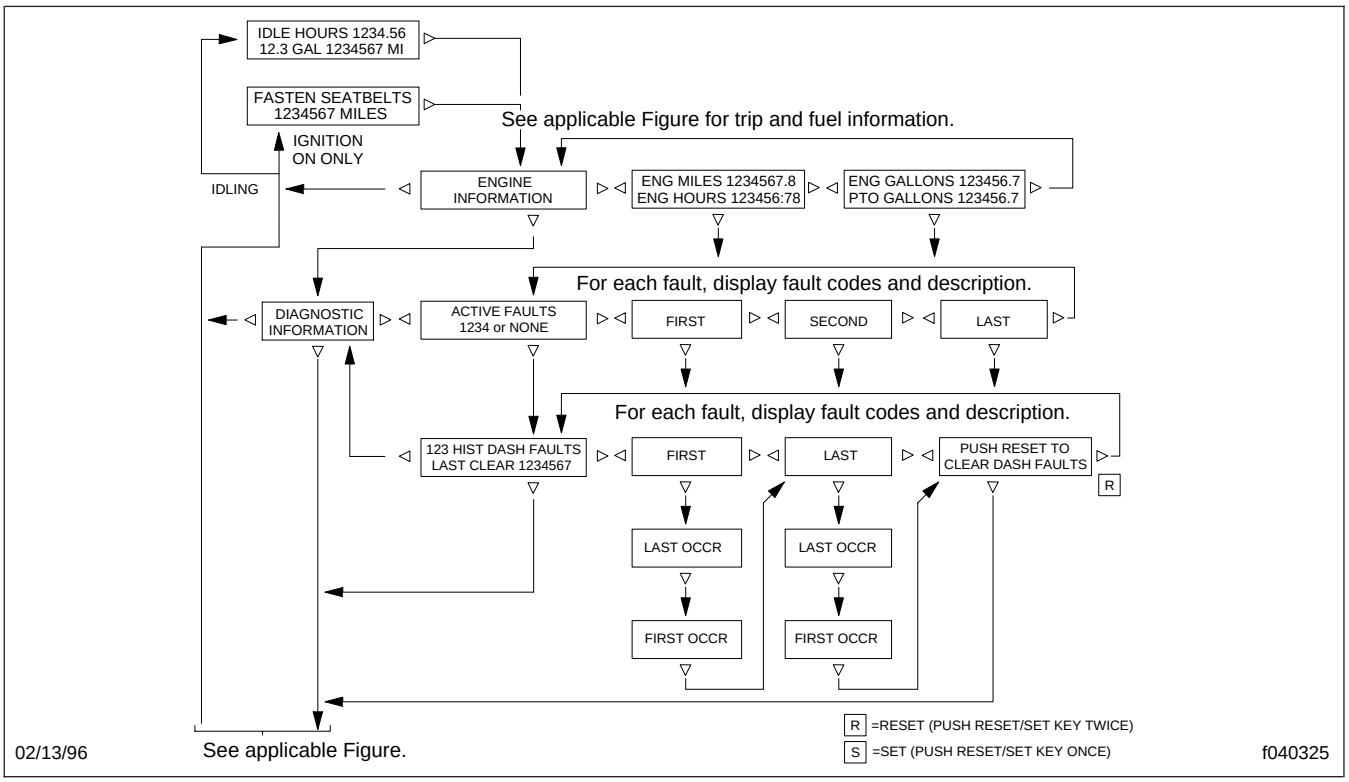

Fig. 2.28, Engine Information and Diagnostic Information

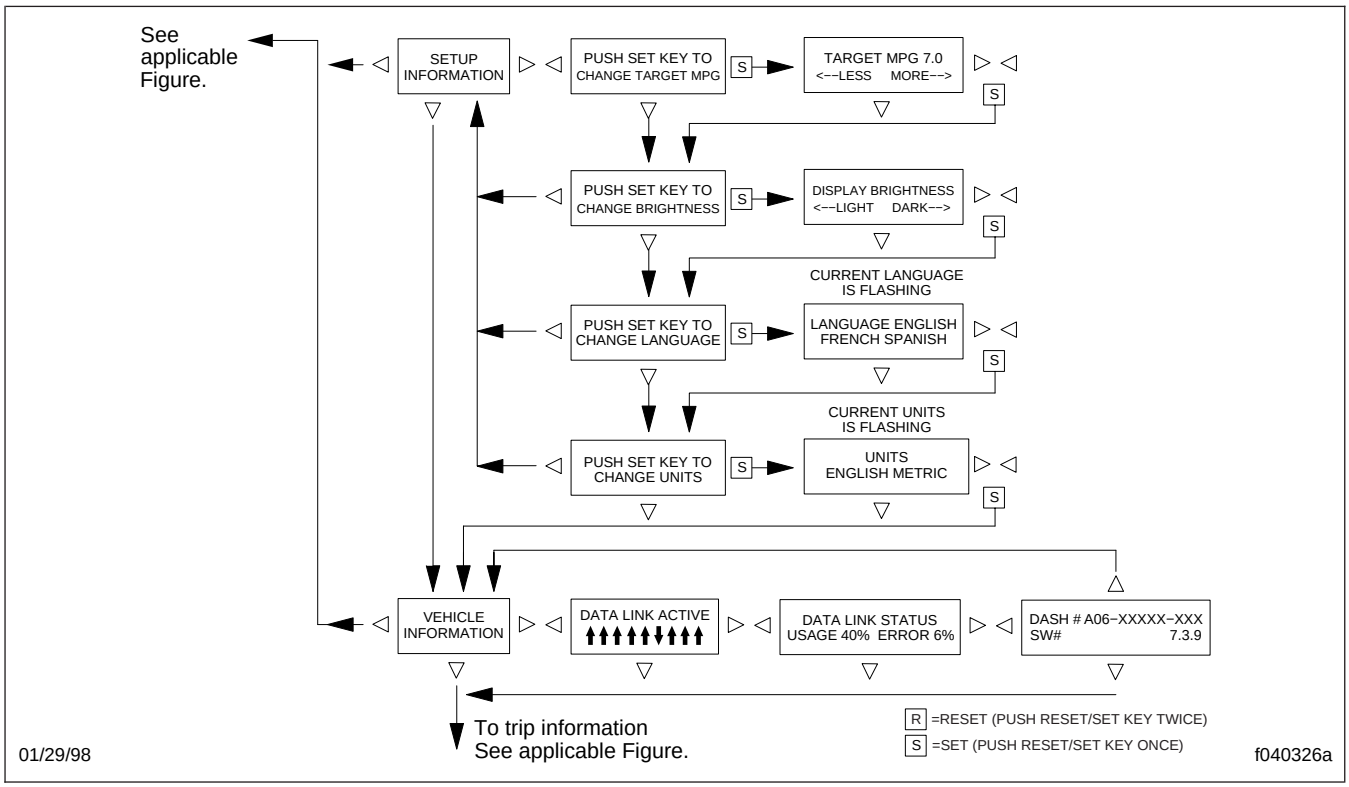

Fig. 2.29, Setup Information and Vehicle Information

"Engine Miles and Hours" displays the total miles and hours logged by the engine since installation.

NOTE: Engine information is supplied by the engine Electronic Control Module (ECM). It can be reset using engine diagnostic tools. For more information, see the engine manufacturer's manuals.

"Engine Gallons and PTO Gallons" displays the gallons of fuel used by the engine and PTO since installation.

Diagnostic Information

Diagnostic information provides two sets of data screens: "Active Faults," followed by a separate screen for each fault until all have been shown, and "Historical Dash Faults," also followed by a separate screen for each fault until all have been shown. See **Fig. 2.28**.

"Active Faults" cannot be reset. Active faults can be cleared only by correcting the fault.

"Historical Dash Faults" displays all dash faults since the last reset. The second line of the display shows the mileage the last time faults were cleared.

Setup Information

Setup information allows the user to change the target MPG, the brightness of the screen display, the language of the display (English, French, or Spanish), and the units of measurement (English/US conventional or metric).

When prompted by the screen, press SET (push the SET/RESET key once). The units that are setable will be blinking. Use the arrow keys (LEFT, RIGHT, and DOWN) until the display shows the desired setup. Press SET again when finished to save the new settings. See **Fig. 2.29**.

Vehicle Information

Vehicle information displays important information, including datalink activity and status, ICU part number, and software identification number.

The "Datalink Active" screen is a dynamic display that shows if the datalink unit is active at the given time. If all of the arrows are pointing down, the level III ICU has not received any information on the datalink since the last time that the ignition switch was turned to the ON position.

The "Datalink Status" screen is also dynamic, showing current datalink use and error rate. The other screen, which shows the ICU part number and the software identification number, is informational only. See **Fig. 2.29**.

After vehicle information, pressing the DOWN ARROW takes you back to trip information and so on.

Hood Tilting

A grab handle at the front of the hood provides a handhold for hood tilting. Stop cables prevent the hood from overtravel. In the operating position, the hood is secured to the lower cab half-fenders by a hold-down latch on each side of the hood.

To Tilt the Hood:

1. Apply the parking brake.
2. Release both hood hold-down latches by pulling the ends up. See **Fig. 2.30**.
3. Using the bumper step and grab handle, slowly tilt the hood until the stop cables support it. See **Fig. 2.31**.

CAUTION

Do not let the hood free fall to the full-open position. To do so could cause damage to the hood or hood straps.

To Return the Hood to the Operating Position:

1. Grasp the grab handle, and lift the hood to the 45-degree position.

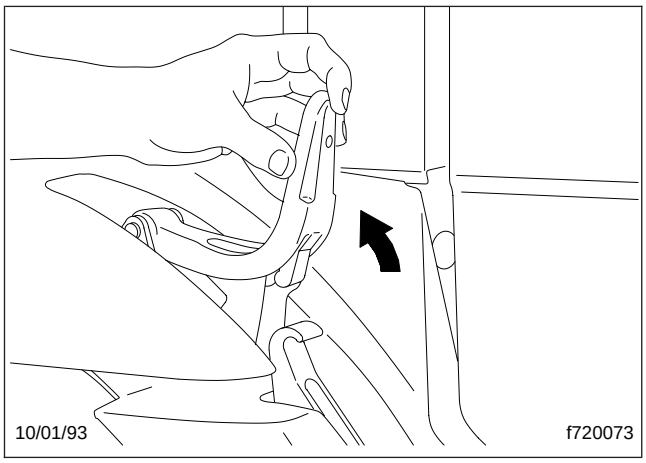

Fig. 2.30, Unlatch the Hood

2. As the hood goes over center, use the bumper step and grab handle to control the rate of descent to the operating position.
3. Make sure that the hood is flush with the cowl, then secure the hood by engaging both hood hold-down latches.

IMPORTANT: Make sure that both hold-down latches are fully engaged before operating the vehicle.

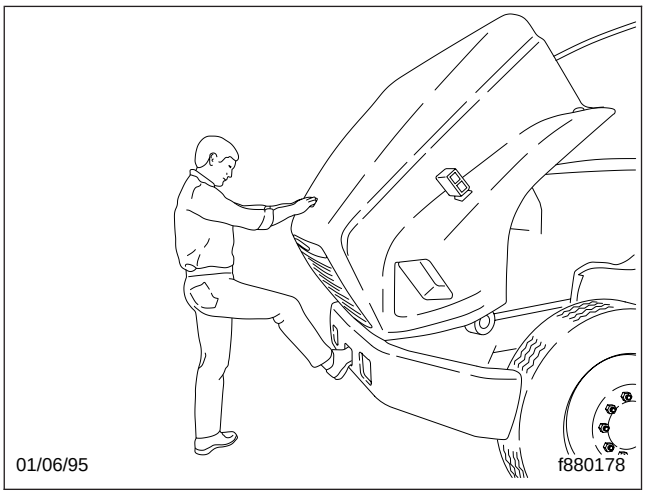

Fig. 2.31, Hood Tilting

3

Engines

Engine Starting

NOTE: Before starting the engine, read **Chapter 2** for detailed information on how to read the instruments and operate the controls.

Whenever you start an engine, watch for any signs of engine problems. If the engine vibrates, misfires, or makes unusual noises, shut down the engine as soon as possible and determine the cause of the problem. Frequently, engine damage may be avoided by a quick response to early indications of problems.

CAUTION

When starting a vehicle equipped with a manual transmission and clutch lock out switch, the clutch pedal must be fully depressed during the entire start sequence. Failure to do so can cause the pinion to release and re-engage, which could cause ring gear and starter pinion damage.

If a vehicle does not start on the first attempt, make sure that the engine has completely stopped rotating before reapplying the starter switch. Failure to do so can cause the pinion to release and re-engage, which could cause ring gear and starter pinion damage.

Moving a vehicle with the starter and/or using the starter to bump the engine for maintenance procedures is strictly prohibited. Use of these methods to bump the engine over or move the vehicle can cause the pinion to release and re-engage, which could cause ring gear and starter pinion damage.

IMPORTANT: Ring gear and starter pinion damage caused by improper starting procedures is not warrantable.

Pre-Start

NOTE: These pre-start steps apply to all engines.

1. Perform the engine pretrip inspection and daily maintenance checks in **Chapter 8**.
2. Set the parking brake.
3. For manual transmissions, place the transmission in Neutral (N) and disengage the clutch.

   For automatic transmissions, make sure that the transmission shift control is in Neutral (N) or Park (P).

NOTE: On vehicles equipped with a neutral start switch, the transmission must be in Neutral (N)

before the engine can be started. For air start systems, check the air supply before starting the engine. There must be at least 100 psi (689 kPa) of air pressure available.

Starting Precautions, All Engines

WARNING

Do not use any starting aid, such as ether, in engines with an intake air preheater. This could cause an explosion, resulting in serious personal injury or death.

CAUTION

Don't crank the engine for more than 30 seconds at a time during any of the following procedures. Wait two minutes after each try to allow the starter to cool. Failure to do so could cause starter damage.

NOTE: Some starters are equipped with optional overcrank protection. If overcranking occurs, a thermostat breaks the electrical circuit to the starter motor until the motor has cooled.

CAUTION

Protect the turbocharger during the start-up by not opening the throttle or accelerating the engine above 1000 rpm until normal engine idle oil pressure registers on the gauge.

Caterpillar

NOTE: Before attempting to start the engine, follow the steps in "Pre-Start."

1. Turn the ignition switch to the ON position. See **Fig. 3.1**. The CHECK ENGINE indicator comes on for five seconds.

IMPORTANT: The INTAKE HEATER indicator stays on for a minimum of two seconds, regardless of coolant temperature. Wait until the INTAKE HEATER indicator goes out before attempting to start the engine.

2. Turn the ignition switch to the START position. Release the switch the moment the engine starts.

   2.1 If the engine does not start after 15 to 20 seconds of cranking, turn the ignition switch to the OFF position.

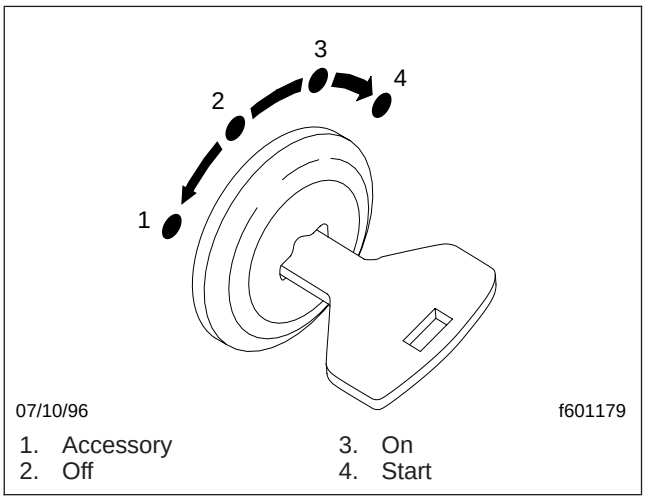

Fig. 3.1, Ignition Switch Positions

2.2 Wait two minutes to allow the starter motor to cool. Turn the ignition switch back to the ON position and try to start the engine again.

2.3 As soon as the engine starts, release the ignition switch allowing the engine to run at a slow idle.

CAUTION

If the oil pressure is too low, shut down the engine immediately to prevent serious damage. If the vehicle is equipped with an automatic shutdown system, the engine will shut down after 30 seconds.

3. The engine may be operated at low load and speed once engine oil pressure has reached 10 psi (69 kPa) and air pressure (if applicable) has reached 64 to 76 psi (441 to 524 kPa).

IMPORTANT: If the engine is operated at low load, it will reach normal operating temperature sooner than at idle speed. Limit unnecessary idle time to 10 minutes or less.

4. When the engine has reached the minimum operating temperature of 160°F (71°C), the engine may be operated at full load.

Cummins

CAUTION

Never attempt to start any Cummins IS series electronic engine (ISB, ISC, ISL) using ether or any other starting fluid. Serious engine damage could result.

NOTE: Before attempting to start the engine, follow the steps in "Pre-Start."

1. Turn the ignition switch to the ON position. See **Fig. 3.1**. The CHECK ENGINE indicator comes on for five seconds. Leave the ignition switch in the ON position until the CHECK ENGINE indicator goes out.

IMPORTANT: The INTAKE HEATER indicator stays on for a minimum of two seconds, regardless of coolant temperature. Wait until the INTAKE HEATER indicator goes out before attempting to start the engine.

2. Turn the ignition switch to the START position. After the engine starts, release the key.
3. Bring the engine up to operating speed gradually as it warms up and develops stable oil pressure.

NOTE: When the engine is started, it takes a short time to build up a lubricating oil film between the shafts and bearings, and between the pistons and cylinder walls. The oil pressure gauge indicates any drop in lubricating oil pressure within 15 seconds of engine start-up.

4. If minimum engine oil pressure at idle of 10 psi (69 kPa) does not register within 15 seconds, shut down the engine.

CAUTION

Protect the turbocharger during the start-up by not opening the throttle or accelerating the engine above 1000 rpm until normal engine idle oil pressure registers on the gauge.

5. Idle the engine for three to five minutes at 1000 rpm before operating the engine under load.

Mercedes-Benz

NOTE: Before attempting to start the engine, follow the steps in "Pre-Start."

CAUTION

Never attempt to start any Mercedes-Benz electronic engine using ether or any other starting fluid. Serious engine damage could result.

1. Turn the ignition switch to the ON position. See **Fig. 3.1**. All of the electronic gauges on the ICU (instrumentation control unit) complete a full sweep of their dials, the warning and indicator lights light up, and the buzzer sounds for three seconds.

IMPORTANT: The INTAKE HEATER indicator stays on for a minimum of two seconds, regardless of coolant temperature. Wait until the INTAKE

HEATER indicator goes out before attempting to start the engine.

2. Turn the ignition switch to the START position. Without touching the throttle pedal, start the engine.
3. Idle the engine for one to three minutes at 700 rpm (600 rpm for 6-cylinder engines) before operating the engine under load.
4. Check the oil pressure gauge for any drop in lubricating oil pressure or mechanical malfunction in the lubricating oil system. Minimum oil pressure at idle is 7 psi (50 kPa).

CAUTION

Do not rev the engine if the oil pressure gauge indicates no oil pressure. Shut down the engine if no oil pressure appears within approximately ten seconds. Check to determine the cause of the problem. Operating the engine with no oil pressure will damage the engine.

Cold Weather Starting

WARNING

Do not use any starting aid, such as ether, in engines with an intake air preheater. This could cause an explosion, resulting in serious personal injury or death.

Modern electronic engines do not normally require special starting aids. At low temperatures, intake air preheaters, manifold preheaters, oil pan heaters, fuel heaters, or water jacket heaters are sometimes used to assist in starting.

If the engine does not start, prime the fuel system. For instructions, see the engine manufacturer's Operation and Maintenance Manual.

In cold weather, use winter-grade (1-D or winterized 2-D) diesel fuel, if available. At temperatures below 32°F (0°C), do not use summer-grade (2-D) diesel fuel.

Caterpillar

Caterpillar electronic engines are designed to start at temperatures above 32°F (0°C) without using starting aids. If the temperature is below 32°F (0°C), startability will be improved by the use of an automatic ether injection system and/or a water jacket heater.

CAUTION

Directing ether at the heater element in the intake air preheater could cause extensive engine damage.

The intake air preheater is activated by turning the ignition switch to the ON position. See **Fig. 3.1**. If the engine is at normal temperature, the INTAKE HEATER indicator goes out after two seconds.

If the temperature is low enough to require use of the heater, the INTAKE HEATER indicator stays on while the intake air preheater warms up. After the indicator goes out, start the engine.

IMPORTANT: Attempting to start the engine before the INTAKE HEATER indicator has gone out could result in excessive white smoke at startup.

If the engine doesn't start after 15 to 20 seconds of cranking, turn the ignition switch to the OFF position and wait two minutes; then repeat the starting procedure.

Cummins

The cold start system approved for use on Cummins engines has been based upon starting aid capabilities to –25°F (–32°C). For more information, see the Cummins *Operation and Maintenance Manual*.

Turn the ignition switch to the ON position. See **Fig. 3.1**. If the engine is at normal temperature, the INTAKE HEATER indicator goes out after two seconds.

If the temperature is low enough to require the heater, the INTAKE HEATER indicator stays on while the intake air preheater warms up. After the indicator goes out, start the engine.

Run the engine slightly above idle until oil pressure shows on the gauge. If oil pressure doesn't show on the gauge within 30 seconds of starting, turn the ignition switch to the OFF position and wait one minute; then repeat the starting procedure.

Mercedes-Benz

NOTE: An intake air preheater is optional on Mercedes-Benz engines.

The intake air preheater (if so equipped) is activated by turning the ignition switch to the ON position. See **Fig. 3.1**. If the engine is at normal temperature, the INTAKE HEATER indicator goes out after two seconds.

If the temperature is low enough to require the heater, the INTAKE HEATER indicator stays on while the intake air preheater warms up. After the indicator goes out, start the engine. If the engine doesn't start after about 30 seconds of cranking, turn the ignition switch to the OFF position and wait two minutes; then repeat the starting procedure.

NOTE: If the engine doesn't start on the second try, wait at least five minutes before using the intake air preheater again.

Starting After Extended Shutdown or Oil Change

An engine in storage for an extended period of time (over winter, for example) may accumulate water in the oil pan. Oil diluted by water cannot provide adequate bearing protection at start-up. For this reason, change the engine oil and filters after extended storage.

Follow the steps below after an oil change or after the engine has been shut down for more than three days:

1. Make sure that the transmission is filled with the correct type of fluid, as recommended by the transmission manufacturer.
2. Make sure that the fuel tank is full. If air has entered the fuel system, prime the fuel system, using the engine manufacturer's instructions.
3. If the engine is equipped with a fuel/water separator, drain off any accumulated water.
4. Check the drive belts to make sure that they are in good condition and properly adjusted. Replace any drive belts that are cracked, worn, or glazed.
5. Check the turbocharger (if so equipped) for signs of oil or exhaust leaks. Correct any problems before starting the engine.
6. Check the engine mounting bolts for tightness. Tighten them if necessary.
7. Make sure that the battery cable connections are clean and tight. Check that the batteries are charged.
8. Start the engine. See "Engine Starting" above.

Engine Break-In

Caterpillar

Every Caterpillar engine must pass a full-load operation test on a dynamometer before shipment, eliminating the need for a break-in period. Only an initial operational check is necessary.

Cummins

Cummins electronic engines are run on a dynamometer before being shipped from the factory. They do not require a break-in period.

IMPORTANT: Special break-in oils are not recommended for new or rebuilt Cummins engines.

Mercedes-Benz

Every Mercedes-Benz engine is tested on a dynamometer before shipment. Therefore, no break-in period is necessary for the MBE900 engine. Before running the engine for the first time, follow the instructions in the engine Operator's Manual.

Engine Operation

Operating vehicles with diesel engines in areas where there are concentrated flammable vapors (such as diesel, gasoline, or propane fumes) can create a hazardous situation. These vapors can be drawn into the engine through the air intake, and cause engine overspeed. Be especially cautious of low-lying or closed-in areas, and always check for signs that flammable vapors may be present.

⚠ DANGER

Don't operate the engine in an area where flammable vapors such as gasoline or diesel fumes are present. Shut down the engine when in an area where flammable liquids or gases are being handled. Failure to observe these precautions could result in serious injury or death.

All diesel engines have been built to comply with the requirements of the Federal (U.S.) Clean Air Act. Once an engine is placed in service, the responsibility for meeting both state and local regulations is with the owner/operator. Good operating practices, regular maintenance, and correct adjustments are factors which will help to stay within the regulations.

Adequate maintenance of the engine, which is the responsibility of the owner/operator, is essential to keep the emission levels low.

The driver should be familiar with the vehicle warning system in order to bring the vehicle to a safe stop if the engine malfunctions. If the driver doesn't understand how the warning system works, an engine shutdown could occur, causing a safety hazard. See **Chapter 2** for information on the control panel for these engines.

Caterpillar

Proper operation and maintenance are key factors in obtaining maximum life and economy from a vehicle engine. Follow the directions in the *Caterpillar Operation and Maintenance Manual*and this manual for trouble-free, economical engine operation.

1. Operate the engine at low load. After normal oil pressure is reached and the temperature gauge begins to move, the engine may be operated at full load.
2. Caterpillar electronic engines automatically idle at 1000 rpm for the correct warm-up time after a cold engine start (less than 40°F [5°C]). These electronic engine systems will reduce the idle speed to 600 rpm when the engine is warm enough to drive the vehicle.

IMPORTANT: Fuel heaters used on vehicles with Caterpillar electronic engines could cause excessive fuel temperatures that affect engine performance and operation of the electronic engine controls. If a fuel heater is used, make sure that it has thermostatic controls. If the fuel heater has a timer, set the timer to activate only for a limited period of time before the engine starts. Make sure that the fuel heater is used only for starting the engine.

3. Avoid excess idling. If extended idle time is required, control the engine speed to 1000 rpm or higher.
4. Select a gear that allows a smooth, easy start without increasing engine speed above low idle or slipping the clutch. Engage the clutch smoothly. Jerky starts waste fuel and put stress on the drivetrain.

   It is not necessary to accelerate Caterpillar electronic engines to governed speed in the lower gears to get the vehicle moving (except in a high-power demand situation such as starting on a grade).
5. Continue to upshift until cruising speed is reached. Use only the rpm needed to make an upshift into the next gear. When cruising speed is reached, select the highest gear available that will pull the load. Experience with your vehicle will show you what rpm is needed to make upshifts under various conditions. This progressive shifting technique will lower fuel costs because the engine will be operating at the lowest rpm needed to pull the load.

NOTE: Caterpillar electronic engines can be programmed to limit engine rpm while the vehicle is operated in the lower and higher gears. This feature assists the driver in following progressive shifting techniques.

6. On uphill grades, allow the engine to lug downward to peak torque rpm (1440 to 1550 rpm) before downshifting. Continue to downshift until you reach a gear that will maintain the desired speed.
   - 6.1 Continue to operate at peak torque rpm as long as the vehicle will maintain its speed.
   - 6.2 If the grade decreases, begin to upshift when the engine speed goes above 2000 rpm.
   - 6.3 For the best fuel economy and performance, control the engine speed within the range of 1400 to 2000 rpm.
7. On a downhill grade, do not coast or put the transmission in Neutral (N). A simple rule to follow is to select the same gear (or one gear lower) than would be needed to go up the grade.

7.1 Avoid downshifting on small hills, even if the engine must be lugged down below peak torque rpm.

7.2 On longer downhill grades, allow the engine to lug to peak torque rpm before downshifting. If the engine speed stabilizes at peak torque rpm, stay in that gear.

7.3 Anticipate long steep downgrades. Reduce vehicle speed before reaching the summit. Select a gear that allows the engine to run near the high engine limit (2900 rpm).

7.4 To maintain a safe speed and increase fuel economy, minimize the amount of braking needed.

Cummins

Follow the directions in the Cummins *Operation and Maintenance Manual* and in this manual for trouble-free, economical vehicle engine operation.

CAUTION

Do not operate the engine at excessive full throttle below the rated rpm for more than 30 seconds. This can shorten the life of the engine and cause severe engine damage.

1. Cummins diesel engines are designed to operate successfully at full throttle under transient conditions down to rated rpm. This is consistent with recommended operating practices.
2. Depending on the vehicle gearing, the posted speed limit can sometimes allow operation in either of the two top gears; however, for improved operating efficiency (fuel economy and engine life), operate in the top gear at reduced rpm, rather than in the next lower gear at the maximum rpm.
3. Cruise at partial throttle whenever road conditions and speed requirements permit. This driving technique permits operating within the most economical power range of the engine.
4. When approaching a hill, open the throttle smoothly to start the upgrade at full power, then shift down as needed, to maintain the optimum vehicle and engine speed. The high torque of Cummins engines may permit topping some grades without shifting.
5. Cummins engines are designed to operate over a wide speed range. More frequent shifting than necessary does not allow proper utilization of this flexibility. The driver who stays in top gear and uses the wider speed range will achieve the best fuel economy.
6. The Cummins diesel engine is effective as a brake on downhill grades, but take care not to overspeed the engine going downhill. The governor has no

control over engine speed when the engine is being pushed by the loaded vehicle.

CAUTION

Do not allow the engine to exceed its governed speed, or serious engine damage could result.

7. Never turn the ignition switch to the OFF position while going downhill. With the engine still in gear, fuel pressure will build up against the shutdown valve and may prevent it from opening when the ignition switch is turned to the ON position.
8. Use a combination of brakes and gears to keep the vehicle under control at all times, and to keep the engine speed below the rated rpm.
9. Check the coolant temperature and oil pressure gauges frequently.

CAUTION

Continuous operation below 140°F (60°C), above 212°F (100°C), or with the oil pressure below 10 psi (69 kPa), can damage the engine.

10. If the engine starts to overheat, reduce the power output of the engine. Do one, or both, of the following: (1) Release pressure on the accelerator pedal; (2) Shift to a lower gear. If the temperature does not return to normal, shut down the engine.

Mercedes-Benz

While you are driving, watch for any signs of engine problems. If the engine overheats, uses excessive fuel or lubricating oil, vibrates, misfires, makes unusual noises, or shows an unusual loss of power, shut down the engine as soon as possible and determine the cause of the problem. Frequently, engine damage may be avoided by a quick response to early indications of problems.

1. Use the tachometer to determine when to shift. Follow the pattern on the shift lever when moving through the gears.
2. Depending on the vehicle gearing, the posted speed limit can sometimes allow operation in either of the two top gears; however, for improved operating efficiency (fuel economy and engine life), operate in the top gear at reduced rpm, rather than in the next lower gear at the maximum rpm.
3. Cruise at partial throttle whenever road conditions and speed requirements permit. This driving technique permits operating within the most economical power range of the engine.

4. Use lower gears in steep downhill driving. Normally, the gear used to descend a hill is the same gear used to climb a hill of the same grade.
5. Never allow the engine to exceed the rated speed. Use the exhaust brake and the optional constant-throttle brake (if so equipped) to lower engine rpm below the rated speed.
6. Never allow the engine to idle for more than 30 minutes. Excessive idling can cause oil to leak from the turbocharger.

CAUTION

Stop the engine at the first sign of malfunction. Almost all malfunctions give some warning to the operator before significant damage occurs. Many engines are saved because alert operators heed the warning signs (sudden drop in oil pressure, unusual noises, etc.) and immediately shut down the engine.

NOTE: Long periods of idling are not good for an engine because the combustion chamber temperatures drop so low that the fuel may not burn completely. This will cause carbon to clog the injector spray holes and piston rings, and may result in stuck valves.

If the engine coolant temperature becomes too low, raw fuel will wash the lubricating oil off of the cylinder walls and dilute the crankcase oil, causing all moving parts of the engine to suffer from poor lubrication.

Cruise Control

Use the ON/OFF switch on the instrument panel to activate the cruise control.

WARNING

Do not activate the fifth wheel air slider control valve when the vehicle is in motion. Doing so could result in damage to the fifth wheel member, kingpin, cab, or trailer, and ultimately, to the drivetrain. A guard is positioned around the switch to prevent it from being accidentally activated.

CAUTION

Do not attempt to shift gears without using the clutch when the cruise control is engaged. Failure to follow this precaution will result in a temporarily uncontrolled increase in engine speed; transmission damage and gear stripping could result.

1. To cruise at a particular speed:

1.1 Move the ON/OFF switch on the instrument panel to the ON position.

1.2 Accelerate to the desired speed.

1.3 Momentarily move the SET/RESUME switch on the instrument panel to the SET position.

2. To disengage cruise control:

2.1 Depress the brake pedal, or clutch pedal, *or*

2.2 Move the ON/OFF switch on the instrument panel to the OFF position.

3. To resume a preselected cruise speed:

3.1 If the ON/OFF switch on the instrument panel is in the OFF position, move it to the ON position.

3.2 Momentarily move the SET/RESUME switch on the instrument panel to RESUME. Cruise will return to the last speed selected.

To adjust cruise speed up or down, hold the SET/RESUME switch on the instrument panel at RESUME to accelerate or at SET to decelerate.

NOTE: The resume vehicle speed memory is not maintained if the ignition switch is turned to the OFF position. Also, it is not maintained with Cummins engines if the ON/OFF switch is turned to OFF.

Cold Weather Operation

General Information

Satisfactory performance of a diesel engine operating in low ambient temperatures requires modification of the engine, surrounding equipment, operating practices, and maintenance procedures. The lower the temperatures the greater the amount of modification required, and yet with the modifications applied, the engines must still be capable of operation in warmer climates without extensive changes.

The following information is provided to engine owners, operators, and maintenance personnel on how cold weather modifications can be applied to get satisfactory performance from their diesel engines.

There are three basic objectives:

- Reasonable starting characteristics followed by practical and dependable warm up of the engine and equipment.
- A unit or installation which is as independent as possible from external influences.

- Modifications which maintain satisfactory operating temperatures with a minimum increase in maintenance of the equipment and accessories.

If satisfactory engine temperature is not maintained, higher maintenance cost will result due to increased engine wear.

Special provisions to overcome low temperatures are definitely necessary, whereas a change to a warmer climate normally requires only a minimum of revision. Most of the accessories should be designed in such a way that they can be disconnected so that there is little effect on the engine when they are not in use.

IMPORTANT: If a winterfront is used on a vehicle with an electronic engine equipped with a charge air cooler, make sure that there are slit openings distributed across the face of the winterfront to allow airflow through the entire charge-air-cooler core. Do not use a winterfront with closed areas that block uniform air flow across all sections of the charge-air-cooler crossflow tubes. This will adversely affect the operation and durability of the charge air cooler.

Caterpillar

If the engine is in good mechanical condition, and the precautions necessary for cold weather operation are taken, ordinary cold weather will not cause difficulty in starting, or loss of efficiency.

For cold weather operation, use the following guidelines:

1. When starting the engine in temperatures below 32°F (0°C), use engine lubricants of lower viscosity. For specifications, see the Caterpillar *Operation and Maintenance Manual* for your engine.
2. Use winter-grade (1-D or winterized 2-D) diesel fuel, if available. At temperatures below 32°F (0°C), do not use summer-grade (2-D) diesel fuel.
3. When the temperature is below freezing, use sufficient antifreeze solution in the cooling system to prevent freezing. See **Group 20** of the *School Bus Chassis Maintenance Manual* for specifications.
4. During cold weather, give more attention to the condition of the batteries. See **Group 15** and **Group 54** of the *School Bus Chassis Workshop Manual* for detailed information.
5. Idle the engine at 1000 to 1200 rpm. This will warm up the engine more quickly.
6. Customer parameters may include cold mode operation. When the sum of the coolant temperature and the intake air temperature is below 127°F (35°C), the system puts the engine in cold mode, limiting engine power, advancing timing, and adjusting the low idle to 1000 rpm to improve warm-up

time. The system will keep the engine in cold mode until the temperature condition has been met. The system will then stop the cold mode and allow the engine to operate normally.

Cummins

The two most commonly used terms associated with preparation of equipment for low temperature operation are "winterization" and "arctic specifications."

Winterization of the engine and/or components makes starting and operating possible down to –25°F(–32°C). This requires:

- Adequate lubrication with low-temperature lubricating oils.
- Protection from the cold air (insulation). The metal temperature does not change, but the rate of heat dissipation is affected.
- Fuel of the proper grade for the lowest temperature.
- Coolant containing 50% corrosion-resistant antifreeze.
- Using an engine block heater, oil pan heater, or coolant heater to raise the engine block and component temperatures above –25°F (–32°C) for starting in lower temperatures.
- Electrical equipment capable of operating in the lowest expected temperature. All switches, connections, and batteries in the electrical system should be inspected, and kept in good condition to prevent losses through poor contacts.

Arctic specifications refer to the material and specifications of components needed for satisfactory engine operation in extremely low temperatures, down to –65°F (–54°C). Contact the nearest Freightliner dealer or Cummins engine dealer, to obtain the special items required.

CAUTION

"Antileak" antifreezes are not recommended for use in Cummins engines. Although these antifreezes are chemically compatible with DCA water treatment, the "antileak" agents may clog the coolant filters.

For more information, see the *Cummins Operation and Maintenance Manual*.

Mercedes-Benz

Take special precautions during cold weather. For service products to use in cold weather, see the engine Operator's Manual.

IMPORTANT: At outside temperatures below –4°F (–20°C), a coolant preheater is recommended.

1. Check for cracks in the battery cases, corrosion of the terminals, and the tightness of the cable clamps at the terminals. Charge the batteries to full capacity. Replace any battery that is unable to hold full charge or is physically damaged.
2. Check the condition and tension of the poly-V belt.
3. Periodically check the coolant mixing ratio (concentration of antifreeze in the coolant). Add more if necessary. The coolant mixing ratio should never rise above 60-percent antifreeze.
4. Use low-viscosity lubricating oils for adequate lubrication.
5. At temperatures below 32°F (0°C), do not use summer-grade (2-D) diesel fuel. To avoid fuel problems due to paraffin separation, use winter-grade (1-D or winterized 2-D) diesel fuel only.

WARNING

The addition of kerosene lowers the flash point of diesel fuel. To prevent fire and risk of injuries due to burning, do not smoke or use open flames around fuel mixed with kerosene. Comply with all appropriate safety regulations.

6. When winter-grade diesel fuel is not adequate, it is possible to mix kerosene with the diesel fuel. Add the kerosene only when refilling the tank, and before adding the diesel fuel.

NOTE: Engine power may drop according to the proportion of kerosene. For this reason, never add more than 50 percent kerosene to the fuel.

Engine Shutdown

Caterpillar

CAUTION

Stopping the engine immediately after it has been working under load can result in overheating and accelerated wear of the engine components. Excessive temperatures in the turbocharger centerhousing will cause oil coking problems. Follow the procedure, outlined below, to allow the engine to cool.

1. With the vehicle stopped, set the parking brake. Reduce engine speed to a low idle.
2. Place the transmission shift lever in Neutral (N).

NOTE: If the engine has been operating at low loads, run it at low idle for 30 seconds before shutting it down. If the engine has been operating at highway speed or at high loads, run it at low

idle for 3 minutes to reduce and stabilize internal engine temperatures before shutdown.

3. Turn the ignition switch to the OFF position and shut down the engine.
4. After shutting down the engine, fill the fuel tank.
5. Check the crankcase oil level with the engine shut down. Maintain the oil level between the ADD and FULL marks on the dipstick.
6. If temperatures below 32°F (0°C) are expected, allow the engine water jacket expansion tank to cool; then, check the coolant for proper antifreeze protection. Add antifreeze, if required. For additional information, see **Group 20** of the *School Bus Chassis Maintenance Manual*.

IMPORTANT: The cooling system must be able to protect against freezing to the lowest expected outside temperature.

7. Repair any leaks, perform minor adjustments, tighten loose bolts, etc. Observe the vehicle mileage or the service meter reading, if so equipped. Perform periodic maintenance as instructed in the Maintenance Interval Schedule in the *Caterpillar Operation and Maintenance Manual*.

Cummins

1. With the vehicle stopped, apply the parking brake, and place the transmission in Neutral (N).
2. Idle the engine for three to five minutes before shutting it down. This allows the lubricating oil and the water to carry heat away from the combustion chambers, bearings, shafts, etc. This is especially important with turbocharged engines. The extreme heat may cause bearings to seize or oil seals to leak.

IMPORTANT: Bearings and seals in the turbocharger are subjected to the high heat of combustion exhaust gases. While the engine is running, this heat is carried away by oil circulation, but if the engine is shut down suddenly, the turbocharger temperature may rise as much as 115°F (46°C).

NOTE: Long periods of idling are not good for an engine because the combustion chamber temperatures drop so low that the fuel may not burn completely. This will cause carbon to clog the injector spray holes and piston rings, and may result in stuck valves.

3. Do not idle the engine for more than 10 minutes.

CAUTION

Stop the engine at the first sign of malfunction. Almost all malfunctions give some warning to the operator before significant damage occurs. Many engines are saved because alert operators heed the warning signs (sudden drop in oil pressure, unusual noises, etc.) and immediately shut down the engine.

4. Turn the ignition switch to the OFF position and shut down the engine.

Mercedes-Benz

If any of the following occur, shut down the engine immediately.

- The oil pressure gauge needle swings back and forth or falls sharply.
- Engine power and rpm fall even though the accelerator pedal remains steady.
- The exhaust pipe gives off heavy smoke.
- The coolant and/or oil temperature gauge readings climb abnormally.
- Abnormal sounds suddenly occur in the engine or turbocharger.

1. With the vehicle stopped, apply the parking brake and place the transmission in Neutral (N).

CAUTION

Idle the engine one to two minutes before shutting it down, if this can be done without damage to the engine. After hard operation, shutting down the engine without idling may cause damage to the turbocharger.

2. Allow the engine to idle one to two minutes before shutting it down. This allows the lubricating oil and the coolant to carry heat away from the combustion chambers, bearings, shafts, and seals. The extreme heat may cause bearings to seize or oil seals to leak.

IMPORTANT: Bearings and seals in the turbocharger are subjected to the high heat of combustion exhaust gases. While the engine is running, this heat is carried away by oil circulation, but if the engine is shut down suddenly, the turbocharger temperature may rise as much as 115°F (46°C).

CAUTION

Except in emergency, do not shut down the MBE900 engine when the coolant temperature is above 194°F (90°C). To do so could damage the engine.

3. Turn the ignition switch to the OFF position and shut down the engine.

Engine Braking System (optional)

Constant-Throttle Valves (MBE900 only)

To increase braking performance, the Mercedes-Benz MBE900 engine can be equipped with constant throttles in each combustion chamber. Small valves built into the cylinder head allow a small amount of compressed air to escape through the exhaust port during the combustion stroke. The constant-throttle valves are open during the entire time that the engine brake is activated. Although some braking ability is lost because the valves are constantly open, constant-throttle braking is quieter in operation than other types of engine brakes.

When only the exhaust brake is installed, a two-position switch on the dash controls the engine braking system. The exhaust brake is only active when the engine speed is between 900 and 2,700 rpm. Depressing the accelerator or clutch pedal deactivates the exhaust brake. The ABS system, when active, also deactivates the exhaust brake.

When both the exhaust brake and the constant throttles are installed, a three-position switch on the dash controls the engine braking system. The exhaust brake can be used alone or together with constant-throttle valves for steep or long grades. Like the engine brake, the constant throttles are deactivated when the accelerator or clutch pedal is depressed. The ABS system, when active, also deactivates constant-throttle braking.

Exhaust Braking System (optional)

General Information

An exhaust brake is an optional auxiliary braking system that assists but does not replace the service brake system. The exhaust brake switch, located on the control panel, (in combination with the accelerator and clutch pedals) allows the driver to make maximum use of the exhaust brake in off-highway and mountain driving as well as in traffic or in high-speed highway driving.

The exhaust brake is a butterfly valve mounted in the exhaust pipe. When the driver’s foot is not on the accelerator pedal and the exhaust brake switch is in the ON

position, an air cylinder shuts the butterfly valve which restricts the flow of exhaust gases and retards the engine. This retarding action is carried through the engine and drivetrain, slowing the vehicle and reducing the need for frequent service brake applications.

IMPORTANT: Exhaust brakes are not intended for use as the primary braking system during vehicle operation.

Starting the Engine

Before starting the engine, make sure that the exhaust brake switch is in the OFF position. Do not turn the exhaust brake on until the engine has reached normal operating temperatures.

Driving Downhill

While approaching a steep grade, make sure that the exhaust brake switch is in the ON position. The exhaust brake comes on as soon as you remove your foot from the accelerator pedal. While going down the grade, use a low enough gear to safely descend with a minimum application of the service brakes. As a general guideline, use the same gear as you would to ascend the hill.

CAUTION

Do not allow the engine to exceed its governed speed, or serious engine damage could result.

Apply the service brakes to reduce the engine rpm or make a slower descent by using a lower gear.

WARNING

Do not use the exhaust brake when driving on slippery or low traction road surfaces. Failure to follow this precaution could result in a loss of vehicle control and possible personal injury or property damage.

Exhaust Brake Operating Characteristics

When you remove your feet from both the accelerator and the clutch pedal and the exhaust brake switch is in the ON position, the exhaust brake is applied. The following conditions should exist if the brake is operating properly:

- A slight change in the sound of the engine may be noticed when the exhaust brake is applied.
- Exhaust smoke should appear normal.
- Engine temperature should remain in the normal operating range.
- Road speed usually decreases when the exhaust brake is applied during a descent. When the vehicle is carrying a heavy load or the grade is extremely steep, you may need to apply the service brakes occasionally.

- Do not expect a retarding effect similar to sudden hard application of the service brakes. The exhaust brake retards the vehicle with a smooth braking effect.
- During a descent, the tachometer usually shows a drop in rpm depending on the grade and the vehicle load.
- Depending on the grade and vehicle load, you may or may not feel the retarding force acting against your body when the brake is applied. The retarding force of the brake may not always be noticed, but it is actually preventing the vehicle from going much faster.

Shutting Down the Engine

Make sure that the exhaust brake is turned off before shutting down the engine.

Pacbrake® Exhaust Brake

The Pacbrake exhaust brake is intended as a supplement to the service brakes and will *not* bring the vehicle to a complete stop. The Pacbrake will assist in the control or reduction of road speed in conjunction with, or independent of, the service brakes. The amount of retarding or braking force is controlled by the driver.

Pacbrake Operation

The Pacbrake is controlled by the exhaust brake switch and the throttle pedal. All applications are additionally affected, controlled, or governed by engine speed through transmission gear selection. The Allison MD3060 transmission has automatic downshifting when the exhaust brake is requested. See the information on the "Allison World Transmission" later in this chapter.

On some applications, when the Pacbrake is in use, it may be necessary to check that the cruise control is not set and that the throttle is in the idle position.

On some applications the engine, transmission, cruise control, and the Pacbrake exhaust brake may electronically interact with each other, which automatically activates their functions. Following are some examples of the programmed options that may be available with the cruise control in the ON position:

- The coast mode engages the Pacbrake when the service brake is applied and disengages when the service brake is released.
- The latch mode engages the Pacbrake when the service brake is applied and the Pacbrake remains on after the service brake is released. The Pacbrake is disengaged when another input (depressing the throttle or clutch, engine speed drops below 800 rpm, or the exhaust brake switch is turned off) is supplied.

- The manual mode does not require the cruise control switch to be on and operates the Pacbrake manually at the driver's discretion.

The amount of braking power the engine will develop is related to the speed (rpm) of the engine. The higher the engine rpm, the greater the retarding power.

Certain conditions may require that the transmission be downshifted in order to generate adequate rpm for the amount of retarding power required. Pacbrake exhaust brakes are designed and approved for safe use at 300 rpm above the engine's maximum governed rpm. See the engine manufacturer's specifications.

NOTE: Starting the engine, idling for short periods of time, and then shutting down the engine is not recommended. During a cold engine start-up, enough moisture is developed within the engine and the exhaust system to create a corrosion hazard that could affect the future operation of the Pacbrake. The brake housing may trap water in the valve shaft bore causing corrosion in an improper or non-functioning brake. If it is necessary to periodically start the engine, it is recommended that normal operating temperatures be attained before shutting down the engine.

Allison World Transmission

Pacbrake exhaust brakes on engines that are used with the Allison World Transmission MD series, and 2000 and 2400 series, are interfaced with the transmission electronic control module (ECM). An exhaust brake enabled transmission ECM will usually provide converter lockup in gears Two (2) through Six (6). Effective exhaust braking begins when the transmission automatically downshifts into Fifth (5) gear (62 mph [100 km/h] or less). Once on, the Pacbrake exhaust brake will control road speed and/or slow the vehicle sufficiently so that the transmission will automatically downshift, if necessary, to Allison's preselect mode.

The preselect mode is normally assigned to Second (2) gear; however, the transmission can be reprogrammed by an Allison Transmission Distributor to Third (3) or Fourth (4) gear should the operator desire. If additional retarding power is required before the automatic downshifting occurs, you can select a lower transmission gear on the Allison shift selector.

4

Clutches

General Information

The major reason that clutches wear out too soon is because they have been overheated. Clutches are designed to absorb and dissipate more heat than encountered in typical operation. The temperatures developed in typical operation will not break down the clutch friction surfaces. However, if a clutch is slipped excessively, or required to do the job of a fluid coupling, high temperatures develop quickly and destroy the clutch. Temperatures generated between the flywheel, driven discs, and pressure plates can be high enough to cause the metal to flow and the friction facing material to char and burn.

Slipping and excessive heat are practically nonexistent when a clutch is fully engaged. But during the moment of engagement, when the clutch is picking up the load, it generates considerable heat. An incorrectly adjusted or slipping clutch will rapidly generate sufficient heat to destroy itself.

The most important items that a driver should be aware of to ensure long service life of the clutch include: starting in the correct gear, recognizing clutch malfunctions, and knowing when to adjust a clutch.

Clutch Operation

Starting the Vehicle in the Correct Gear

NOTE: Manual transmission vehicles are equipped with an ignition interlock switch. The engine will not start until the clutch has been fully depressed.

To drive forward, always start in First (1) gear. After the clutch is fully engaged, accelerate to the correct rpm for the upshift into the next higher gear.

Gear Shifting Techniques

Many drivers upshift into the next gear, or even skip-shift into a higher gear, before the vehicle has reached the correct speed. This type of shifting is almost as bad as starting off in a gear that is too high, since the engine rpm and vehicle speeds are too far apart, requiring the clutch to absorb the speed difference by generating heat. For transmission operating instructions, see **Chapter 5**.

Vehicle Overload, or Overloading the Clutch

Clutches are designed for specific vehicle applications and loads. These limitations should not be exceeded.

CAUTION

Overloading will not only result in damage to the clutch, but also to the entire power train.

Riding the Clutch Pedal

Riding the clutch pedal is destructive to the clutch, since partial clutch engagement permits slippage, generating excessive heat. Riding the clutch pedal will also put a constant thrust load on the release bearing, which can thin out the lubricant. Release bearing failures can be attributed to this type of misuse.

Holding the Vehicle on an Incline With a Slipping Clutch

A slipping clutch accumulates heat faster than it can be dissipated, resulting in early clutch failures. Never use the clutch to hold your position on a hill.

Coasting With the Clutch Released (pedal depressed) and the Transmission in Gear

Coasting with the clutch released and the transmission in gear can cause high driven disc rpm through multiplication of ratios from the final drive and transmission.

WARNING

Do not coast with the clutch released (pedal depressed) and the transmission in gear. High driven disc rpm could cause the clutch facing to be thrown off the disc. Flying debris could cause injury to persons in the cab.

Engaging the Clutch While Coasting

Engaging the clutch while coasting can result in tremendous shock loads and possible damage to the clutch, as well as to the entire drivetrain.

Reporting Erratic Clutch Operation Promptly

Report erratic clutch operation as soon as possible so that maintenance personnel have a chance to inspect the clutch components.

Clutch Adjustments

Some clutches have an internal adjustment. See the applicable section in **Group 25** of the *School Bus Chassis Workshop Manual* for clutch adjustment procedures and specifications.

CAUTION

Operating the vehicle with the clutch incorrectly adjusted could result in clutch or clutch brake failure.

Clutch Lubrication

Lubricate the clutch release bearing at frequent intervals. See **Group 25** of the *School Bus Chassis Maintenance Manual* for intervals and procedures.

CAUTION

Failure to lubricate the release bearing as recommended could result in release bearing damage and damage to the clutch.

5

Transmissions

Fuller Straight-Shift Transmissions

General Information

Fuller FS–4205A/B, FS–5205A/B, and FS–6305A/B transmissions have five forward speeds and one Reverse (R) speed. See **Fig. 5.1** for the shift pattern.

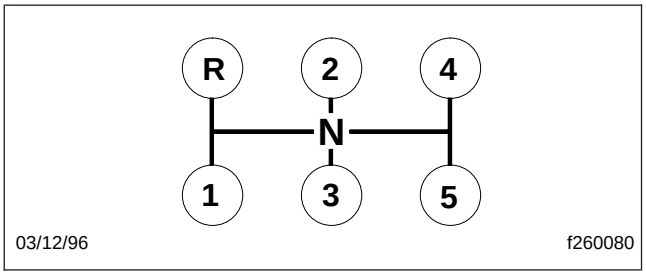

Fig. 5.1, Shift Pattern, FS-4205A/B, FS-5205A/B, and FS-6305A/B

Fuller FS–5306A and FS–6306A transmissions have six forward speeds and one Reverse (R) speed. See **Fig. 5.2** for the shift pattern.

These transmissions are designed for use with fuel economy engines where a minimum of shifting is desired and less gear reduction is acceptable.

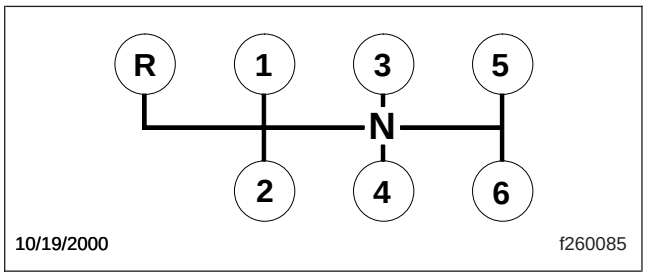

Fig. 5.2, Shift Pattern, FS-5306A and FS-6306A

Operation

NOTE: Always use First (1) gear when starting to move the vehicle forward.

1. Depress the clutch pedal and engage First (1) gear.
2. Accelerate and gradually engage (release) the clutch pedal to get moving.
3. Accelerate smoothly until ready to upshift to the next gear.
4. Release the accelerator, disengage the clutch, upshift, engage the clutch, and accelerate.
5. Continue upshifting using the sequence described in the previous steps. Follow the pattern on the shift lever.

6. When downshifting, shift progressively down through each successive lower gear as follows:

   When the engine speed drops to the same rpm to which it fell immediately after upshifting to that same gear, disengage the clutch and move the shift lever to the next lower gear; engage the clutch smoothly.

   Continue downshifting, as conditions require, using the same sequence described above.

IMPORTANT: Do not rest your foot on the clutch pedal while driving. This causes partial clutch disengagement, and will cause premature clutch wear.

NOTE: Always disengage the clutch completely when shifting gears. Double-clutching is unnecessary.

Allison Automatic Transmissions

General Information

Allison four-, five-, and six-speed automatic transmissions have six shift positions on the selector lever. See **Fig. 5.3**. The selector lever is lighted for night driving. Each forward shift position provides a range of forward gears that are selected automatically according to the speed of the vehicle, engine temperature, and throttle position.

NOTE: Vehicles equipped with an Arens shift-by-wire shift control system have an electronic push-button selector similar to that described below for MD-series transmissions.

MD-series automatic transmissions have six forward speeds and one Reverse (R) speed. See **Fig. 5.4**. These transmissions have electronic shift controls that can be programmed to allow the use of different numbers of geared speeds. For instance, the transmission can be programmed to operate as a four-speed, five-speed, or six-speed unit in the "primary" shift mode. If needed, a "secondary" shift mode can be programmed to provide another shift configuration to optimize vehicle use under different operating conditions. To activate a secondary shift mode, or other special function programmed into the electronic control unit (ECU), depress the mode button. "Mode On" is displayed in the indicator panel just above the push-buttons. A label just above the Mode button identifies the special function.

NOTE: Each time that a push-button is depressed on the shift selector, a short beep is heard. This indicates that the ECU has received input to change operation.

The MD-series transmission system is designed to warn the driver of transmission malfunctions. The driver of a vehicle equipped with one of these transmissions should know the extent of the warning system in order to safely operate the vehicle. See **Chapter 2** for information on the warning system.

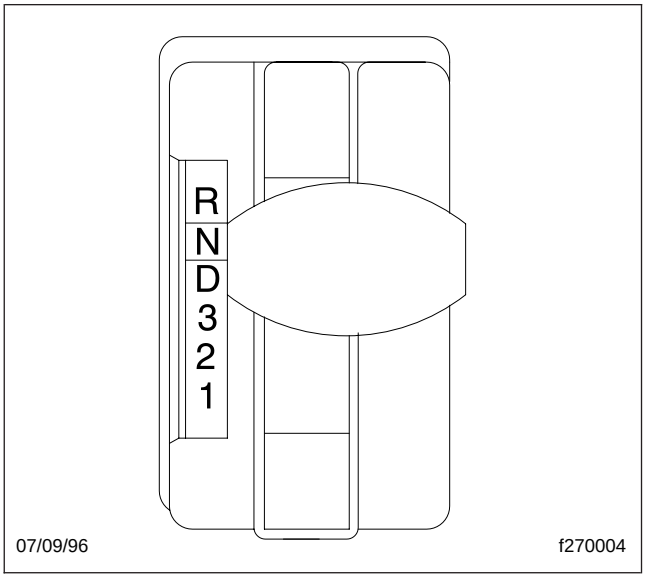

Fig. 5.3, Shift Indicator Lever

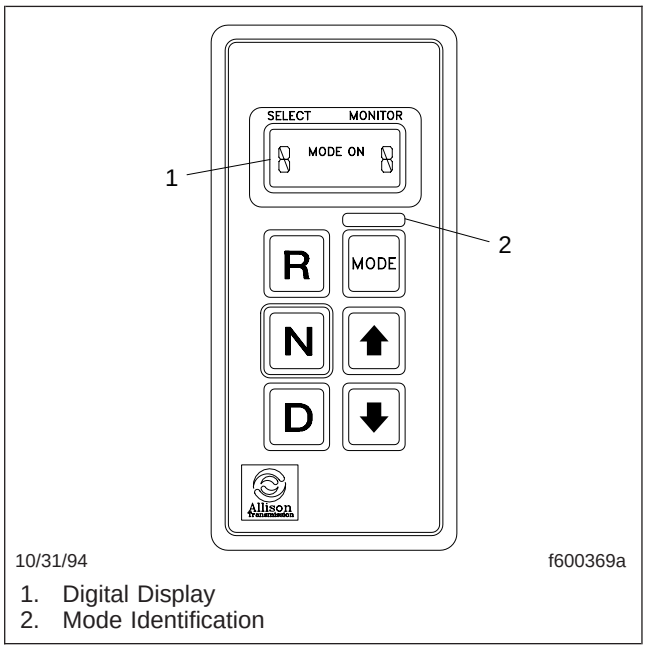

Fig. 5.4, Allison Push-Button Shift Selector

Operation

IMPORTANT: Do not race the engine when shifting from Neutral (N) into a Drive (D) gear range.

1. Use Reverse (R) to back the vehicle. Completely stop the vehicle before shifting from a forward gear to Reverse (R) or from Reverse (R) to a forward gear. There is only one Reverse (R) gear.
2. Use Neutral (N) and set the parking brake to park the vehicle with the engine running or shut down. The engine may be started in this position. Always chock the tires for hilly or off-road parking.

CAUTION

Do not allow the vehicle to coast in neutral. This can result in severe transmission damage. Also, no engine braking is available.

3. Select Drive (D) for all normal driving conditions. The vehicle will start out in First (1) gear, and as speed increases, the transmission will upshift through each gear automatically. As the vehicle slows down, the transmission will downshift to the correct gear automatically.

   Occasionally the road, load, or traffic conditions make it desirable to restrict the automatic shifting to a lower range. The lower the gear range, the greater the engine braking power.
4. Use Second (2) or Third (3) for slow driving in heavy city traffic, or on mountain roads when more precise speed control is desirable. Use them also for climbing long grades and for engine braking when descending moderately steep grades. To prevent excessive engine speed, do not drive faster than 45 miles per hour (72 km/h) in Second (2) or Third (3).
5. Use First (1) for climbing very steep grades and for engine braking at low speeds when going downhill. To prevent excessive engine speed, do not drive faster than 25 miles per hour (40 km/h) in First (1).

NOTE: In the lower gear ranges, the transmission will not upshift above the highest gear selected unless the engine governed speed is exceeded.

MD-Series Transmissions

CAUTION

The engine should never be operated for more than 30 seconds at full throttle with the transmission in gear and the output stalled. Prolonged operation of this type will overheat the transmission fluid and will result in severe damage to the transmission.

1. Start the engine, then check the digital display on the push-button shift selector. Under Select at the top of the unit, the display shows the primary shift mode. Under Monitor, the gear that is engaged is displayed.

WARNING

Never shift from neutral (N) to drive (D) or reverse (R) at engine speeds above idle. The vehicle will lurch forward or backward, which could cause property damage and personal injury.

2. Use Reverse (R) to back the vehicle. Completely stop the vehicle before shifting from a forward gear to Reverse (R) or from Reverse (R) to a forward gear. There is only one Reverse (R) gear.
3. Select Drive (D) for all normal driving conditions. The vehicle will start out in First (1) gear, and as speed increases, the transmission will upshift through each gear automatically. As the vehicle slows down, the transmission will downshift to the correct gear automatically.

   The pressure of your foot on the accelerator pedal influences the automatic shifting. When the pedal is fully depressed, the transmission will automatically upshift near the governed speed of the engine. A partially depressed position of the pedal will cause the upshifts to occur at a lower engine speed.
4. Occasionally the road, load, or traffic conditions make it desirable to restrict the automatic shifting to a lower range. The lower the gear range, the greater the engine braking power.

   Use the UP or DOWN arrow buttons on the shift selector to reach the desired gear. The Select indicator will display your choice, and the Monitor indicator will show the selected gear once it is reached.

NOTE: In the lower gear ranges, the transmission will not upshift above the highest gear selected unless the engine governed speed is exceeded.

5. Engage Neutral (N) and apply the parking brake when the vehicle is parked with the engine running.

CAUTION

Do not allow the vehicle to coast in neutral. This can result in severe transmission damage. Also, no engine braking is available.

Safety Precautions

Do the following steps if you have to leave the cab with the engine running (for example, when checking the transmission fluid):

1. Bring the vehicle to a complete stop using the service brakes.
2. Put the transmission in Neutral (N).
3. Ensure that the engine is at low idle rpm (below 1000).

4. Apply the parking brake and the emergency brake, and make sure that they are properly engaged.
5. Chock the rear tires and take any other steps necessary to keep the vehicle from moving.

6

Steering System

General Information

When there is no load on the vehicle, and the front tires are pointed straight ahead, the steering wheel spokes should be at the 9 and 3 o'clock positions, or within 10 degrees to either side. See **Fig. 6.1**. See **Group 46** of the *School Bus Chassis Workshop Manual* for steering adjustment procedures.

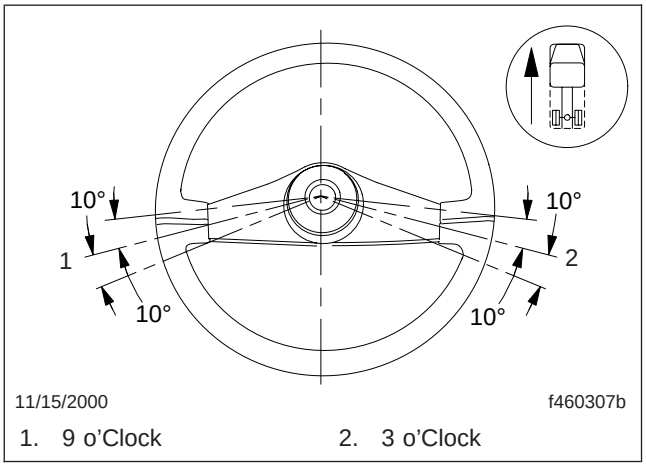

Fig. 6.1, Steering Wheel Centered

CAUTION

Never steam clean or high-pressure wash the steering gear. Internal damage to gear seals and ultimately the steering gear can result.

Power Steering System

The power steering system consists of a steering gear (which includes a manual steering mechanism, a hydraulic control valve, and a hydraulic power cylinder), hydraulic hoses, power steering pump, reservoir, and other components. The power steering pump, driven by the engine, provides the power assist for the steering system. If the engine is not running, there is no power assist.

If the power-assist feature does not work due to hydraulic fluid loss, steering pump damage, or some other cause, bring the vehicle to a safe stop. Do not drive the vehicle until the cause of the problem has been corrected.

WARNING

Driving the vehicle without the power-assist feature of the steering system requires much greater effort, especially in sharp turns or at low speeds, which could result in an accident and possible injury.

Drivers should use the power available with a power steering system carefully. If the front tires become lodged in a deep chuckhole or rut, drive the vehicle out instead of using the steering system to lift the tires from the hole. Also avoid turning the tires when they are against a curb, as this places a heavy load on steering components and could damage them.

Tilt/Telescope Steering Column (optional)

Adjust the seat to a comfortable position. If the vehicle is equipped with a tilt/telescope steering column, pull the control lever on the column upward and adjust the steering wheel to the desired position. See **Fig. 6.2**. Push the lever downward and extend or retract the steering column as desired. Release the control lever to lock the steering column in place.

If the vehicle is equipped with a tilt-only column, adjust the steering wheel with either a control lever on the column or a foot-operated control valve located to the left of the clutch or brake pedal. See **Fig. 6.3**. Release the control lever or valve to lock the steering column in place.

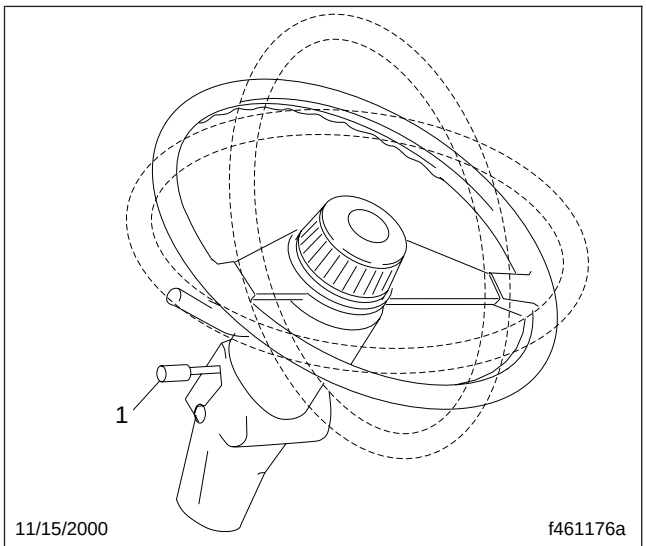

1. Tilt/Telescope Lever

Fig. 6.2, Tilt/Telescope Steering Column

WARNING

Make sure that the control lever or valve is released and that the steering column is locked before driving the vehicle. Never tilt or telescope the column while driving the vehicle. Doing so could cause loss

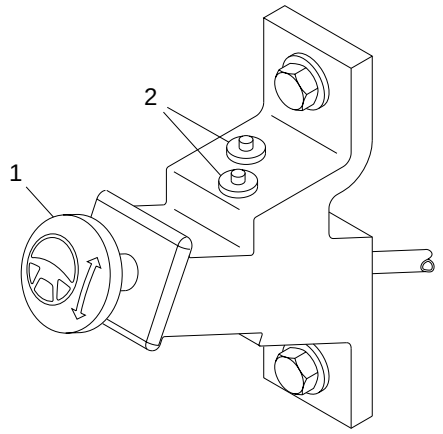

04/05/2002 f461234a

1. Adjustment Valve Knob (yellow)
2. Air Line Connections

Fig. 6.3, Foot-Operated Tilt Column Control Valve

of vehicle control, personal injury, and property damage.

7

Brake System

Driveline Parking Brake Burnishing

WARNING

Vehicles equipped with hydraulic brakes are equipped with a driveline parking brake. If your vehicle is equipped with a driveline parking brake, you must burnish the parking brake before you put the vehicle into regular service. An unburnished parking brake may not have full effectiveness. If the parking brake slips, personal injury or property damage could result.

Burnish the driveline parking brake as follows:

1. Load the vehicle to its gross vehicle weight (GVW).
2. With the parking brake released, turn the knob on the end of the parking brake handle clockwise to adjust the parking brake. Adjust the brakes until you can stop the vehicle traveling at 10 mph (16 km/h) within stopping distances of 21 to 36 feet (8 to 11 m) using only the parking brake.
3. Using only the parking brake, make 10 stops from 10 mph (16 km/h) on a hard dry road surface. After each stop, release the parking brake and drive the vehicle at 20 mph (32 km/h) for 2.5 miles (4 km) to cool the brake.
4. Adjust the parking brake linkage and hand lever knob to suit your load and road grade conditions.

Hydraulic Brake System

General Information

The Bendix hydraulic brake system includes a power booster, master cylinder, reservoir , hydraulic lines, a brake rotor on each wheel hub, and a brake caliper and pad assembly at each rotor. See **Fig. 7.1**.

IMPORTANT: Make sure that the fluid level in the master cylinder reservoir is up to the ridge that surrounds the reservoir. Use only heavy-duty brake fluid, DOT 3, in the hydraulic brake system.

The master cylinder controls braking power to the front and rear brakes. The power booster is attached to the rear of the master cylinder and is connected to the power steering system (which provides pressurized power steering fluid). An electrically-powered "reserve" pump operates if there is inadequate fluid flow from the power steering pump to the power booster. The brake system warning light comes on if there is a problem within the system. Bring the vehicle to a safe stop and correct the problem before continuing operation of the vehicle. See **Group 42** of the *School Bus Chassis Workshop Manual* for hydraulic brake system troubleshooting and adjustment procedures.

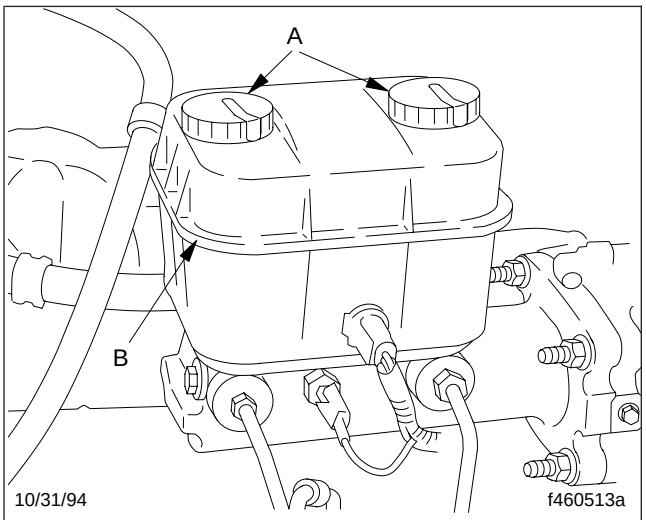

A. Open caps and check fluid level.
B. Fill to this level.

Fig. 7.1, Hydraulic Brake Reservoir

Operation

Before driving the vehicle, secure all loose items in the cab so that they will not fly forward during a full brake application. Check that the brake system warning light is out after releasing the hand brake. If the warning light does not go out, correct the problem before continuing operation of the vehicle.

During normal brake stops, depress the foot brake control pedal until braking action slows the vehicle. Increase or decrease the pressure on the pedal so that the vehicle comes to a smooth, safe stop. When the forward speed of the vehicle has decreased to almost the idling speed of the engine, push the clutch pedal in (if so equipped), and shift the transmission into Neutral (N). Apply the hand parking brake if the vehicle is to be parked.

Meritor WABCO® Antilock Braking System (ABS), Hydraulic Brake Systems

The Meritor WABCO® Antilock Braking System (ABS) is an electronic wheel speed monitoring and control system that works with the hydraulic brake system. ABS passively monitors vehicle wheel speed at all times, but *controls* wheel speed during an emergency or reduced-traction stop. In normal braking applications, the standard hydraulic brake system is in effect.

IMPORTANT: For proper ABS system operation, do not change tire sizes. The sizes of the tires installed during production are programmed into the electronic control unit. Installing different sized

tires could result in inaccurate wheel speed signals to the ECU resulting in reduced braking force, which could lead to longer stopping distances.

ABS includes signal-generating tone wheels and sensors located in the wheel hubs of each sensed axle. The sensors transmit vehicle wheel speed information to an electronic control unit (located on the frontwall) that interprets these signals to calculate wheel speed and a vehicle reference speed. If the calculations indicate wheel lockup, the appropriate control circuit signals the brake pressure modulator to increase or decrease braking pressure until wheelslip has been corrected.

CAUTION

An accumulation of road salt, dirt, or debris on the ABS tone wheels and sensors can cause the ABS warning light to come on. If the ABS light does come on, the tone rings and sensors should be inspected for corrosion and serviced if necessary. The service should include cleaning of the tone rings and sensors. If any tone ring on a vehicle shows severe corrosion, all tone rings on that vehicle should be replaced.

During winter months in areas where corrosive materials are used on the highways, periodically clean the underside of the vehicle, including the tone rings and sensors, to ensure proper ABS function and to protect the components from corrosion. Clean more frequently when unusually corrosive chemicals are being used.

IMPORTANT: During winter months in areas where corrosive materials are used on the highways, periodically clean the underside of the vehicle to ensure proper ABS functioning.

The electronic control unit also has a safety circuit that constantly monitors the wheel sensors, brake pressure modulator, and the electrical circuitry. The dash warning light (ABS) comes on after the ignition switch is turned to the ON position. Once the vehicle moves faster than about 4 mph (6 km/h), the warning light goes out only if all of the vehicle's ABS components are working.

If, during vehicle operation, the safety circuit senses a failure in any part of the ABS system (a sensor, brake pressure modulator, wiring connection, short circuit, etc.), the warning light (ABS) comes on and the control circuit where the failure occurred is switched to normal braking action. Even if the ABS system is partially or completely inoperative, normal braking ability is maintained. An exception would be if the brake pressure modulator, or hydraulic fluid line is damaged. As these components are an integral part of the hydraulic brake system, normal braking may be impaired or inoperative.

IMPORTANT: If any of the ABS warning lights do not work as described above, or come on while

driving, repair the ABS system immediately to ensure full antilock braking capability.

During emergency or reduced-traction stops, fully depress the brake pedal until the vehicle comes to a safe stop; *do not pump*the brake pedal. With the brake pedal fully depressed, the ABS system will control all wheels to provide steering control and a reduced braking distance.

Although the ABS system improves vehicle control during emergency braking situations, the driver still has the responsibility to change driving styles depending on the existing traffic and road conditions. For example, the ABS system cannot prevent an accident if the driver is speeding or following too closely on slippery road surfaces.

Air Brake System

General Information

A dual air brake system consists of two independent air brake systems which use a single set of brake controls. Each system has its own reservoir, plumbing, and brake chambers. The primary system operates the service brakes on the rear axle; the secondary system operates the service brakes on the front axle.

⚠ WARNING

Do not operate the vehicle with the front brakes backed off or disconnected. Backing off or disconnecting the front brakes will not improve vehicle handling and may lead to loss of vehicle control resulting in property damage or personal injury.

Loss of air pressure in the primary system causes the rear service brakes to become inoperative; front brakes will continue to be operated by secondary system air pressure.

Loss of secondary system air pressure causes the front axle brakes to become inoperative; rear service brakes will continue to be operated by the primary system.

Before driving your vehicle, allow time for the air compressor to build up a minimum of 95 psi (655 kPa) pressure in both the primary and secondary systems. Monitor the air pressure system by observing the dual system air pressure gauges and the low-air-pressure warning light and buzzer. The warning light and buzzer shut off when air pressure in both systems reaches 64 to 76 psi (441 to 524 kPa).

The warning light and buzzer come on if air pressure drops below 64 to 76 psi (441 to 524 kPa) in either system. If this happens, check the air system pressure

gauges to determine which system has low air pressure. Although the vehicle's speed can be reduced using the foot brake control pedal, either the front or rear service brakes will not be operating, causing a longer stopping distance. Bring the vehicle to a safe stop, and have the air system repaired before continuing.

WARNING

Do not drive the vehicle with the parking brakes caged. If the vehicle is driven with the parking brakes caged, there would be no means of stopping the vehicle if a complete loss of air pressure occurred. This could result in serious personal injury or vehicle damage. Before caging the spring parking brakes, make the connection to a towing vehicle or chock the tires.

NOTE: Before a vehicle with insufficient system air pressure can be moved, the spring parking brakes must be released by applying an external air source, or by manually caging (manually releasing) the parking brake springs.

After correcting the brake system problem, uncage the spring parking brakes before resuming normal vehicle operation.

Operation

Before driving the vehicle, secure all loose items in the cab so that they will not fly forward during a full brake application.

During normal brake stops, depress the foot brake control pedal until braking action slows the vehicle. Increase or decrease the pressure on the pedal so that the vehicle comes to a smooth, safe stop. When the forward speed of the vehicle has decreased almost to the idling speed of the engine, push the clutch pedal in (if so equipped), and shift the transmission into Neutral (N). Apply the parking brake if the vehicle is to be parked.

The yellow diamond-shaped knob on the control panel actuates the parking brake valve. See **Fig. 7.2**. Pull the knob out to apply the parking brake.

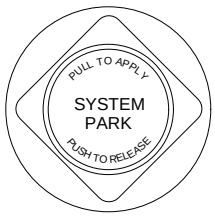

02/09/95 f600631

Fig. 7.2, Parking Brake Valve Knob

WARNING

If the vehicle is equipped with an air suspension system, do not move the vehicle with the air suspension deflated. Doing so could result in a loss of vehicle control, possibly causing personal injury and property damage.

CAUTION

Do not use the spring parking brakes if the service brakes are hot, such as after descending a steep grade. Also, do not use the spring parking brakes during freezing temperatures if the service brakes are wet. To do so could damage the brakes if hot, or cause them to freeze during cold weather.

If the brakes are wet, drive the vehicle in low gear and lightly apply the brakes to heat and dry them. Allow hot brakes to cool before using the spring parking brakes. Always chock the tires.

If the brakes are wet, drive the vehicle in low gear and lightly apply the brakes to heat and dry them.

Allow hot brakes to cool before using the parking brake. Always chock the tires.

Meritor WABCO® Antilock Braking System (ABS), Air Brake Systems

The Meritor WABCO® Antilock Braking System (ABS) is an electronic wheel speed monitoring and control system that works with the air brake system. ABS passively monitors vehicle wheel speed at all times, but *controls* wheel speed during an emergency or reduced-traction stop. In normal braking applications, the standard air brake system is in effect.

IMPORTANT: For proper ABS system operation, do not change tire sizes. The sizes of the tires installed during production are programmed into the electronic control unit. Installing different sized tires could result in a reduced braking force, leading to longer stopping distances.

ABS includes signal-generating tone wheels and sensors located in the wheel hubs of each sensed axle. The sensors transmit vehicle wheel speed information to an electronic control unit (located on the frontwall). The control unit's main circuit interprets the speed sensor signals and calculates wheel speed, wheel retardation, and a vehicle reference speed. If the calculations indicate wheel lockup, the main circuit signals the appropriate solenoid control valve to reduce braking pressure. During emergency braking, the solenoid control valve alternately reduces, increases, or maintains air

pressure supply in the brake chamber to prevent front and rear wheel lockup.

CAUTION

An accumulation of road salt, dirt, or debris on the ABS tone wheels and sensors can cause the ABS warning light to come on. If the ABS light does come on, the tone rings and sensors should be inspected for corrosion and serviced if necessary. The service should include cleaning of the tone rings and sensors. If any tone ring on a vehicle shows severe corrosion, all tone rings on that vehicle should be replaced.

During winter months in areas where corrosive materials are used on the highways, periodically clean the underside of the vehicle, including the tone rings and sensors, to ensure proper ABS function and to protect the components from corrosion. Clean more frequently when unusually corrosive chemicals are being used.

IMPORTANT: During winter months in areas where corrosive materials are used on the highways, periodically clean the underside of the vehicle to ensure proper ABS functioning.

The electronic control unit also has a safety circuit that constantly monitors the wheel sensors, solenoid control valves, and the electrical circuitry. The ABS warning light comes on after turning the ignition switch to the ON position. Once the vehicle moves faster than about 4 mph (6 km/h), the warning light goes out only if all of the ABS components are working.

The Meritor WABCO® ABS system combines one front-axle control channel with the rear axle (the four-sensor system) to form one control circuit. For example, the sensor and solenoid control valve at the left-front axle form a control circuit with the sensor and solenoid valve on the right rear axle. If, during vehicle operation, the safety circuit senses a failure in any part of the ABS system (a sensor, solenoid control valve, wiring connection, short circuit, etc.), the warning light (ABS) comes on and the control circuit where the failure occurred is switched to normal braking action. The remaining control circuit will retain the ABS effect. Even if the ABS system is partially or completely inoperative, normal braking ability is maintained. An exception would be if a solenoid control valve (or combination solenoid control valve) is damaged and inoperative. As these components are an integral part of the air brake system, normal braking may be impaired or inoperative.

IMPORTANT: If any of the ABS warning lights do not work as described above, or come on while driving, repair the ABS system immediately to ensure full antilock braking capability.

During emergency or reduced-traction stops, fully depress the brake pedal until the vehicle comes to a safe stop; *do not pump*the brake pedal. With the brake pedal fully depressed, the ABS system will control all wheels to provide steering control and a reduced braking distance.

Although the ABS system improves vehicle control during emergency braking situations, the driver still has the responsibility to change driving styles depending on the existing traffic and road conditions. For example, the ABS system cannot prevent an accident if the driver is speeding or following too closely on slippery road surfaces.

Automatic Slack Adjusters

Automatic slack adjusters are required on all vehicles equipped with air brakes manufactured after October 20, 1994. Automatic slack adjusters should never be manually adjusted except during routine maintenance of the foundation brakes (e.g., replacing shoes), during slack adjuster installation or in an emergency situation.

When the brake pushrod stroke exceeds the legal brake adjustment limit on a vehicle, there is likely a mechanical problem with the foundation brake components or the adjuster is improperly installed.

Visit a repair facility as soon as possible when brakes equipped with automatic slack adjusters are determined to be out of adjustment.

WARNING

Manually adjusting an automatic slack adjuster to bring the pushrod stroke within legal limits is likely masking a mechanical problem. Adjustment is not repairing. In fact, continual adjustment of automatic slack adjusters may result in premature wear of the adjuster itself. Further, the improper adjustment of some automatic slack adjusters may cause internal damage to the adjuster, thereby preventing it from properly functioning.

8

Pretrip Inspection and Daily Maintenance

Pretrip Inspection Checklist

IMPORTANT: If the vehicle is taken out of service for an extended period of time (such as for the Summer) follow the procedures below.

- In regions where corrosive materials are applied to roads and highways to control ice, thoroughly clean the underside of the vehicle to prevent corrosion.
- Ensure that the vehicle is not parked over dry brush or leaves. This is a potential fire hazard.
- Disconnect the batteries and charge them periodically using a trickle charger.
- Approximately once a month, connect the batteries, start the vehicle, and allow the engine to reach normal operating temperature.
- Once the engine reaches normal operating temperature, lubricate the radiator shutters. This will prevent them from seizing.

The following pretrip inspection checklist helps ensure that the vehicle components are in good working condition before each trip.

Pretrip inspections cannot be performed in a short period. In checklist form, the sequence below may seem to be overly time-consuming. However, careful pretrip inspections save time by eliminating stops later to adjust items overlooked or forgotten.

Each checklist step corresponds with detailed instructions found under "Pretrip Inspection and Daily Maintenance Procedures." If any system or component does not pass this inspection, it must be corrected before operating the vehicle. See the *School Bus Chassis Workshop Manual* for repair procedures, and the *School Bus Chassis Maintenance Manual* for lubricant recommendations, specifications, and maintenance intervals and procedures.

NOTE: Apply the parking brakes and chock the tires.

1. Drain the air brake system air reservoirs, if so equipped.
2. Inspect the batteries and battery cables.
3. Check the fluid level in the windshield washer reservoir.
4. Check the front hub lubricant level (if equipped with oil-lubricated wheel bearings).
5. Tilt the hood. Examine the steering components.
6. Check the coolant level in the surge tank sight glass and check the radiator and the charge air cooler for clogging or damage. Check the radiator for coolant leaks.

7. Check the condition and operation of the engine radiator shutters.
8. Check the condition of the coolant hoses and heater hoses.
9. Check the condition of the drive belts.
10. Inspect the engine for fuel, oil, and coolant leaks.
11. Inspect the engine and chassis wiring.
12. Inspect the air intake system for leaks or damage. Check the intake-air restriction indicator if it is mounted on the air intake system.
13. Check the fluid level in the hydraulic brake fluid reservoir, if so equipped.
14. Check the engine lubricating oil level.
15. Check the oil level in the automatic transmission, if so equipped.
16. Check the fuel water separator (if so equipped) for contaminants.
17. Close the hood and engage the hood hold-down latches.
18. Inspect the fuel tank(s) and fuel line connections. If so equipped, be sure that the fuel tank shutoff valves are open.
19. Check the fuel level in the fuel tank(s) and be sure that the fuel cap vent area is clean. If so equipped, check the fuel/water separator for leaks. If needed, prime the fuel system.
20. Inspect the front and rear suspension components, including the springs and air springs, shocks, and suspension brackets.
21. Check for excessive play at the steering wheel.
22. On mechanical clutch linkages (if so equipped), check the clutch pedal free-travel.
23. Turn the ignition switch to the ON position and start the engine. Be sure that the oil pressure warning system is operating. Leave the engine running.
24. Make sure that the electric horn is operating properly.
25. Make sure that all of the lights are working, including the brake lights, high and low beam headlights, turn signals, clearance lights, and emergency flashers. Check the condition of the reflectors. Turn the lights off. Shut down the engine.
26. Inspect the air brake components (if so equipped) including the brake chamber pushrods, air reservoirs, and air lines.
27. Check the brake lining wear (if equipped with air brakes).
28. Make sure that the brakes are adjusted on all axles.

29. Check the tire inflation pressures and inspect each tire for bulges, cracks, cuts, and punctures.
30. Check for indications of loose wheel nuts or rim nuts and examine each rim and wheel component.
31. Check the air brake system for proper operation.
32. Test the service brakes before leaving the lot.
33. Test the parking brakes on a 20-percent grade.

Pretrip Inspection and Daily Maintenance Procedures

Whenever equipment requires adjustment, replacement, repair, addition of lubricants, or a change of lubricants, see the *School Bus Chassis Workshop Manual* for repair procedures and specifications. See the *School Bus Chassis Maintenance Manual* for lubricant recommendations, specifications, and maintenance intervals and procedures.

1. *Drain the air brake system air reservoirs, if so equipped.*

   Air reservoirs serve as storage tanks for compressed air. They collect water condensed from the air and small amounts of oil from the air compressor. Water and oil normally enter the reservoir in the form of vapor because of the heat generated during compression.

   After the water and oil condense, they collect near the tank drain valves. Drain the resulting emulsion as follows:

⚠ WARNING

Failure to drain the air reservoirs as instructed could cause sludge formation in the air brake system. Sludge could adversely affect braking, causing loss of control, which could cause death, personal injury, or property damage.

IMPORTANT: If the air tanks are not equipped with automatic drain valves, they must be drained daily. If they are equipped with automatic drain valves, they must be drained in this same manner at least once a week.

1.1 Open the wet tank valve (the drain cock or pull-chain drain located on the forward end of the supply air reservoir, which is connected directly to the air compressor). Block the valve open.

⚠ WARNING

When draining the air reservoir, do not look into the air jets or direct them toward anyone. Dirt or sludge

particles may be in the airstream and could cause injury.

1.2 Exhaust the remaining air and moisture from the system by opening the drain cocks on the bottoms of the remaining air reservoirs. Block the valves open.

1.3 Water and oil emulsion often forms pockets which will not drain while compressed air is in the reservoirs. Because of these pockets, leave the valves blocked open during the first part of the pretrip inspection.

2. *Inspect the batteries and battery cables as follows:*

WARNING

Battery posts, terminals, and related accessories contain lead and lead compounds, chemicals known to the State of California to cause cancer and reproductive harm. To prevent possible personal injury, always wash your hands after handling battery parts and related accessories.

2.1 Access the batteries. Be sure that the battery hold down is secure. If it is loose, tighten the hold-down bolts; if it is broken, replace it.

CAUTION

Take care to keep the vent plugs tight so that the neutralizing solution does not enter any of the battery cells and damage the battery.

2.2 Remove any corrosion from the hold down and the top of the battery. Use diluted ammonia or a soda solution to neutralize the acid present, then rinse off the ammonia or soda solution with clean water.

If the battery posts or cable terminals are corroded, disconnect the terminals from the posts. Clean them with a soda solution and a wire brush. After cleaning, connect the terminals to the battery posts, then apply a thin coat of petroleum jelly to the posts and terminals to help retard corrosion.

3. *Check the fluid level in the windshield washer reservoir.*

Tilt the hood to access the reservoir (located next to the surge tank). Add washer fluid as needed. See **Fig. 8.1**.

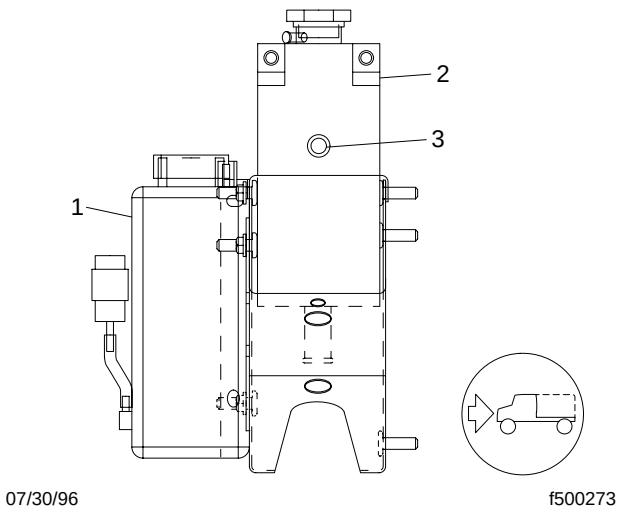

1. Windshield Washer Reservoir
2. Surge Tank
3. Sight Glass

Fig. 8.1, Check the Surge Tank Fluid Level

WARNING

Washer fluids may be flammable and poisonous. Do not expose washer fluid to an open flame or any burning material, such as a cigarette. Always comply with the washer fluid manufacturer's recommended safety precautions.

4. *Check the front hub lubricant level (if equipped with oil-lubricated wheel bearings).*

   Observe the level of the wheel bearing lubricant in the hub cap at each end of the front axle and, if needed, fill the hubs to the level indicated on the hub cap. See **Group 33** of the *School Bus Chassis Maintenance Manual* for recommended lubricants.

IMPORTANT: Before removing the fill plug, always clean the hub cap and plug.

5. *Tilt the hood. Examine the steering components.*

   Examine the steering gear mounting bolts, pitman arm nut, and the drag link nuts for tightness. See **Fig. 8.2**. Be sure that the steering driveline and the U-joints are in roadworthy condition, without cracks, breaks, looseness, or other damage. Tighten loose nuts, and replace damaged parts as needed. For instructions, see **Group 46** of the *School Bus Chassis Workshop Manual*.

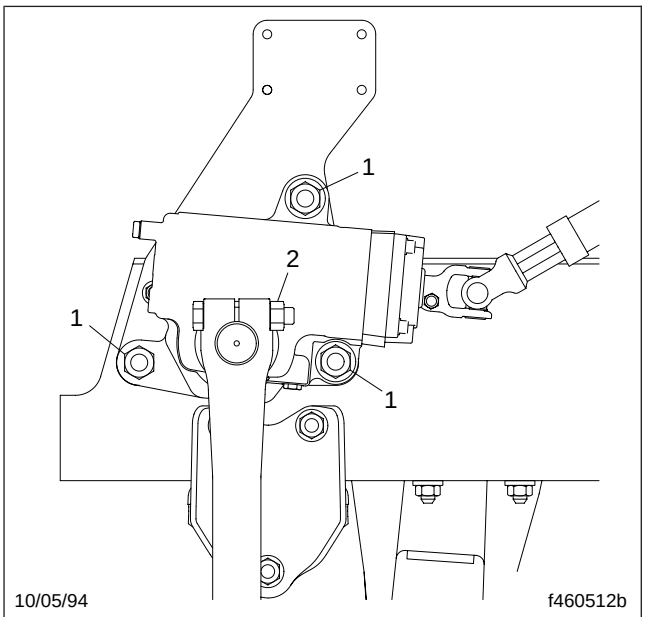

1. Steering Gear Mounting Bolt
2. Pitman Arm Pinch Bolt Nut

Fig. 8.2, Steering Gear (TAS series)

CAUTION

Coolant must be filled to the full line of the surge tank. Low coolant could result in engine overheating, which could cause engine damage.

6. *Check the coolant level in the surge tank sight glass.* See **Fig. 8.1**. *Check the condition of the radiator fins and the charge air cooler.*

   If the coolant level is low, check the amount of antifreeze protection. If the protection is adequate, add a 50/50 mixture of water and antifreeze. If additional protection is needed, add antifreeze only. Fill to the level of the bottom of the surge tank fill neck.

   Good airflow through the radiator core and air-to-air aftercooler core is essential for proper engine cooling. The cores allow air passage, but form a particle barrier which tends to collect insects and airborne debris.

   Inspect for clogged fins. Use compressed air or water directed from the fan side of the core to backflush any material restricting airflow.

   Inspect and clean the charge air cooler. If clogged, the airflow through the radiator could be restricted.

   Straighten bent or damaged fins to permit airflow across all areas of the cores.

Repair or replace the radiator if it is leaking. See **Group 20** of the *School Bus Chassis Workshop Manual* for instructions.

NOTE: When traveling through areas of high insect concentrations, it may be necessary to clean the exterior of the radiator or aftercooler core as often as every 200 miles (320 km).

7. *Check the condition and operation of the engine radiator shutters.*

   Inspect both pneumatic- and hydraulic-type engine radiator shutters and ensure that they are free of contaminants and corrosion and operate properly.

8. *Check the condition of the coolant hoses and heater hoses.*

   Make sure that the radiator inlet and outlet coolant hoses and heater hoses are pliable and are not cracking or ballooning. Replace hoses that show signs of cracking, weakening, or ballooning. Replace all hoses, including heater hoses, at the same time. Service-type knitted or braided yarn-reinforced neoprene hose is acceptable.

   Silicone hoses, having an extended service life, can be substituted for the reinforced neoprene type. See the *Service Parts Catalog* or contact your dealer.

   Tighten hose clamps as necessary, but do not overtighten as hose life can be adversely affected.

   Be sure that the hose support brackets are securely fastened. Make sure that the hoses are not located near sources of wear, abrasion, or high heat.

9. *Check the condition of the drive belts.*

   Check the fan belt(s) and the alternator belt for signs of glazing, wear (frayed edges), damage (breaks or cracks), or oil contamination. If a belt is glazed, worn, damaged, or oil soaked, replace the belt following the instructions in **Group 01** of the *School Bus Chassis Workshop Manual*.

   Check all of the belts for proper tension. See **Group 01** of the *School Bus Chassis Workshop Manual* for instructions.

NOTE: On Cummins engines, a belt tensioner automatically adjusts the fan and alternator belt to the correct tension. If the belt slips, repair or replace the tensioner. For instructions, see the *Cummins Engine Operation and Maintenance Manual*.

10. *Inspect the engine for fuel, oil, and coolant leaks.*

    Correct any leaks found.

11. *Inspect the engine and chassis wiring.*

Inspect the engine and chassis for loose wiring, chafed insulation, and damaged or loose hold-down clamps. Tighten loose wires or hold-down clamps; replace damaged wiring or clamps.

12. *Check the air intake system for leaks or damage.*

    Check the intake-air restriction indicator to determine if the air cleaner filter element needs to be changed. Replace the filter element if the yellow signal stays locked at 25 in$H_2$0. See **Group 09** of the *School Bus Chassis Workshop Manual* for filter element replacement instructions.

    Check the engine air intake piping from the air cleaner to the engine intake. Inspect the piping for loose connections, cracks, torn or collapsed hoses, punctures, and other damage. Tighten loose connections and replace damaged components. Make sure that the piping system is airtight so that all of the intake air passes through the air cleaner.

CAUTION

Failure to maintain a sealed air intake system could allow the entry of dirt and contaminants into the engine. This could adversely affect engine performance and result in engine damage.

NOTE: After replacing the filter element, reset the restriction indicator by pressing the reset button.

13. *Check the fluid level in the hydraulic brake fluid reservoir*, *if so equipped.* See **Fig. 8.3**.

    If needed, fill the reservoir up to the ridge that surrounds the reservoir. Use only heavy-duty brake fluid, DOT 3.

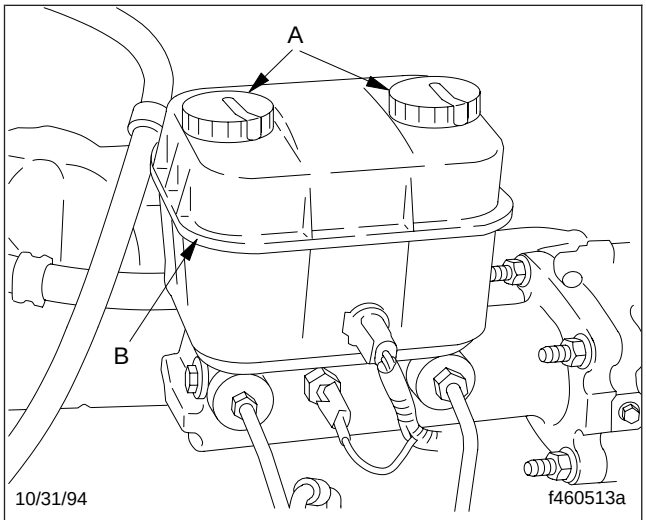

A. Open caps and check fluid level.
B. Fill to this level.

Fig. 8.3, Check the Hydraulic Brake Fluid Level

14. *Check the engine oil level.* See **Fig. 8.4**.

    The oil level should show between the upper and lower marks on the dipstick. Add enough oil to bring the level up to the operating range. See the engine manufacturer's Operation and Maintenance Manual for recommended lubricants and capacities.

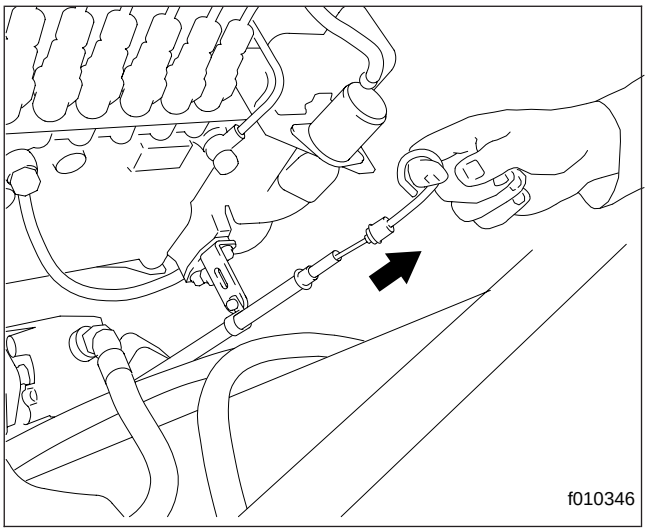

Fig. 8.4, Check the Engine Oil Level

CAUTION

Operating the engine with the oil level below the low mark or above the high mark could result in engine damage.

15. *Check the oil level in the automatic transmission, if so equipped.*

    NOTE: The fluid must be warm to ensure an accurate check. The fluid level rises as temperature increases.

    With the vehicle on a level surface, check the oil level (the dipstick is next to the windshield washer reservoir) in the transmission using one of the following procedures:

    Hot Check

    - Operate the transmission in a Drive (D) range until normal operating temperature, 160 to 200°F (71 to 93°C), is reached.
    - Park the vehicle. Shift to Neutral (N) and apply the parking brake. Let the engine run at idle.
    - Wipe the dipstick clean and check the fluid level. A safe operating level is any level within the HOT run (upper) band on the dipstick. See **Fig. 8.5**.

- If the fluid is not within this range, add or drain fluid as needed to bring the level to the top of the HOT run band. See the *School Bus Chassis Maintenance Manual* for fluid types and capacities.

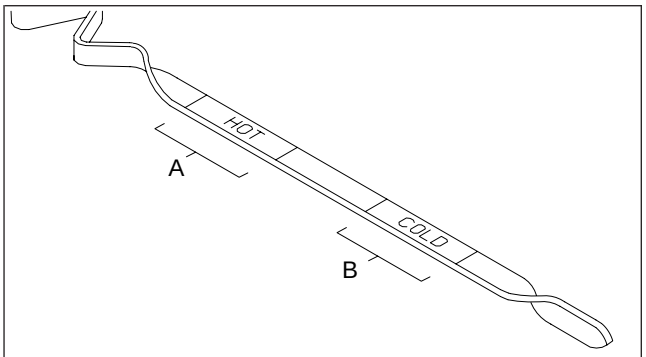

02/27/2002 f270077

A. HOT Run Band
B. COLD Run Band

Fig. 8.5, Automatic Transmission Dipstick

Cold Check

- A cold check may be made when the sump temperature is 60 to 104°F (15 to 40°C).
- Run the engine for at least one minute to clear the fluid system of air.
- With the engine running, wipe the dipstick clean and check the fluid level. See **Fig. 8.5**. Any level within the COLD run (lower) band is satisfactory for operating the vehicle. If the level is not within the COLD run band, add or drain fluid until it reaches the middle of the COLD run band.
- Perform a hot check at the first opportunity after normal operating temperature, 160 to 200°F (71 to 93°C), is reached.

16. *Check the fuel water separator (if so equipped) for contaminants.*

    With the engine shut down, partially open the drain valve under the collection bowl and drain water and contaminants as needed.

17. *Close the hood and engage the hood hold-down latches.*

18. *Inspect the fuel tank(s) and fuel line connections. If so equipped, be sure that the fuel tank shutoff valves are open.*

    Replace leaking fuel tanks. Repair or replace any lines or connections that are leaking. For procedures, see **Group 47** of the *School Bus Chassis Workshop Manual*.

    If equipped with fuel tank shutoff valves, be sure that the valves are fully open.

CAUTION

Never operate the engine with the fuel tank shutoff valves partly closed. This could damage the fuel pump, causing a sudden loss of engine power.

19. *Check the fuel level in the tank(s) and be sure that the fuel cap vent area is clean. Check the fuel/ water separator (if so equipped) for leaks, and if needed, prime the fuel tank system.*

WARNING

Never fill fuel tanks to more than 95 percent of their liquid capacity. This could make them more likely to rupture from impact, possibly causing fire and resulting in serious personal injury or death by burning.

IMPORTANT: Use only low-sulfur diesel fuels. Low-sulfur diesel fuels have a maximum 0.05 percent sulfur content compared to a 0.26 to 0.30 percent sulfur content for other fuels. Failure to use low-sulfur diesel fuels may void the warranty on emissions components.

19.1 To keep condensation to a minimum, fill the fuel tanks at the end of each day, but not to more than 95 percent of liquid capacity. Select the proper grade of fuel as specified by the engine manufacturer.

WARNING

Do not mix gasoline or alcohol with diesel fuel. This mixture could cause an explosion. When filling fuel tanks, do not smoke or use an open flame near the fuel tanks. Combustion of diesel fuel oil or fuel vapors could result, possibly causing personal injury or property damage.

19.2 Always strain or filter fuel before filling the tanks. This will lengthen the life of the engine fuel filter and reduce the chances of dirt entering the engine.

20. *Inspect the front and rear suspension components, including the springs and air springs, shocks, and suspension brackets.*

Check for broken spring leaves, loose U-bolts, cracks in the suspension brackets, and loose fasteners in the spring hangers and shackles. Inspect the shock absorbers for loose fasteners and leaks.

Tighten all loose fasteners and replace any component that is worn, cracked, or otherwise damaged.

⚠ WARNING

Do not replace individual leaves of a damaged front or rear suspension leaf spring assembly; replace the complete spring assembly. Visible damage, such as cracks or breaks, to one leaf causes hidden damage to other leaves. Replacement of only the visibly damaged part(s) is no assurance that the spring is safe. If cracks or breaks exist on front spring assemblies in either of the two top leaves, a loss of vehicle control could occur. Failure to replace a damaged spring assembly could cause an accident resulting in serious personal injury or property damage.

21. *Check the steering wheel for excessive play.*

    With the front tires pointing straight ahead, turn the steering wheel until motion is observed at the front wheels. Align a reference mark on a ruler, then slowly turn the steering wheel in the opposite direction until motion is again detected at the wheels. Measure the lash (free play) at the rim of the steering wheel. See **Fig. 8.6**.

    Excessive lash exists if steering wheel movement exceeds 4-3/4 inches (121 mm) with an 18-inch (470-mm) steering wheel. If there is excessive lash, check the steering system for wear or incorrect adjustment of the linkage and steering gear before operating the vehicle.

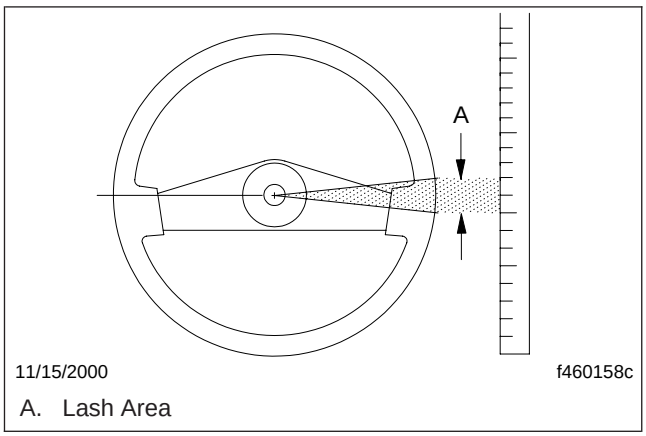

A. Lash Area

Fig. 8.6, Measure Lash at the Steering Wheel

22. *Check the clutch pedal free-travel, if applicable.*

    The main indicator for assessing clutch wear is clutch pedal free-travel. Free-travel is a decreased resistance felt at the top of the clutch pedal stroke. With the clutch pedal in this range, the clutch is fully engaged and the only resistance to clutch pedal movement is return spring tension. Clutch pedal free-travel should be approximately 1-1/2 to 2 inches (38 to 51 mm). See **Fig. 8.7**. If the clutch

pedal free-travel is less than 3/4 inch (19 mm), adjust the clutch internally.

For instructions, see **Group 25** of the *School Bus Chassis Workshop Manual*.

CAUTION

Excessive clutch free pedal may prevent complete clutch disengagement; insufficient clutch pedal free-travel causes slippage and short clutch life. Never wait for the clutch to slip before making a clutch adjustment.

23. *Start the engine and make sure that the oil-pressure warning system is working.*

    When the engine is started, the oil-pressure warning will come on until the oil pressure rises above a preset minimum.

    If the warning does not come on when the ignition switch is turned to the ON position, repair the system.

CAUTION

Failure to repair the engine shutdown/ warning system could result in a sudden engine shutdown without warning during vehicle operation.

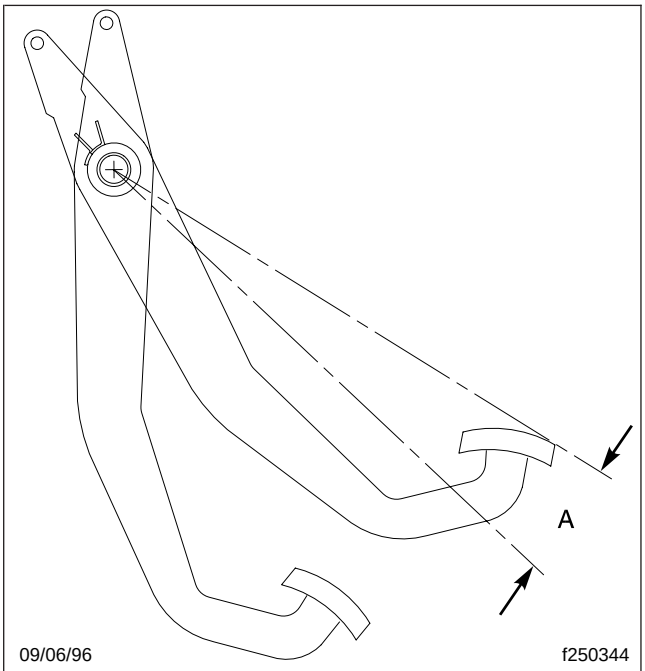

A. About 1-1/2 to 2 inches (38 to 51 mm)

Fig. 8.7, Check Clutch Pedal Free-Travel

24. *Make sure that the electric horn works.*
25. *Make sure that all of the lights are working.*

Turn on the headlights, dash lights, and emergency flashers and leave them on.

If any of the gauge bulbs, the switch panel label bulb, or the right- and left-turn indicator bulbs are not working, replace them. If they still don't work, find and correct the problem. Turn off all of the lights. Shut down the engine.

DANGER

Do not loosen or remove the parking brake clamp ring for any purpose. See Fig. 8.8. The parking/ emergency brake section of the brake chamber is not intended to be serviced. Serious injury or death may result from sudden release of the power spring.

Before doing any repairs or adjustments on a service/parking brake chamber, read the applicable warnings and instructions in Group 42 of the *School Bus Chassis Workshop Manual***.**

WARNING

Do not operate the vehicle with the front brakes backed off or disconnected. Backing off or disconnecting the front brakes will not improve vehicle handling and may lead to loss of vehicle control resulting in property damage or personal injury.

CAUTION

If the external breather tube or breather cap is missing or incorrectly installed, road dirt and debris can adversely affect the operation of the brake chamber. Once inside of the chamber, dirt and debris can cause the internal parts of the chamber to deteriorate faster.

NOTE: Check vehicles operating under severe or adverse conditions more frequently.

26. *Inspect the air brake components (if so equipped) including the brake chamber pushrods, air reservoirs, and air lines.*

    Look for worn clevis pins on brake chamber pushrods and missing or damaged cotter keys on the brake chamber pushrod clevis pins. Replace worn clevis pins and install new cotter keys if necessary.

    Visually inspect the piston rod engagement with the clevis. At least seven threads of engagement are required; there should be 1 inch (25 mm) of clearance from the center line of the clevis pin hole to the end of the piston rod. See **Fig. 8.9**. See **Group 42** of the *School Bus Chassis Workshop Manual* for adjustment procedures.

See if the chamber piston rod is in line with the slack adjuster. Misalignment can cause the piston rod to rub on the nonpressure chamber and cause a dragging brake. See **Group 42** of the *School Bus Chassis Workshop Manual* if the chamber piston rod is improperly aligned.

Visually inspect the exterior surfaces of the chamber for damage. Make sure that breather holes in the nonpressure section(s) are open and free of debris. See **Group 42** of the *School Bus Chassis Workshop Manual* for instructions to replace damaged parts.

On all parking brake installations, check for the presence of an end cover cap or dust plug and make sure that the cap or plug is securely snapped into place. On most MGM parking brake chambers equipped with an integral release bolt, an end cover cap is installed over the release bolt. Be sure that the end cover cap is snapped tightly into place.

Check for rusted connections, missing snap rings, and damaged camshaft grease seals. Repair or replace damaged or missing parts.

Check the air reservoir band fasteners. Make sure that the outside surfaces of the reservoirs are painted to prevent corrosion damage. Inspect the reservoir surfaces for damage, such as cracks and dents. Replace corroded or damaged reservoirs with new ones. Do not repair damaged reservoirs. Old or used reservoirs are not acceptable as replacements. If a reservoir requires replacement, see **Group 42** of the *School Bus Chassis Workshop Manual* for instructions.

Inspect the air lines as follows:

26.1 Check the clearance between the hoses, exhaust manifold, and turbocharger, or other hot spots. Excessive heat will cause the material in the hoses to deteriorate rapidly or become brittle. Provide at least six inches (150 mm) of clearance. More clearance is recommended if the hose is located above the heat source.

26.2 Check for kinks, dents, or swelling of the hoses. If a hose is damaged, replace it with one of the same size and type.

26.3 Do not route the hose on top of anything likely to be stepped on or walked on.

26.4 Check for damage to hoses located near moving parts, such as drivelines, suspensions, and axles. If the moving parts are catching or pinching the lines, make corrections as needed.

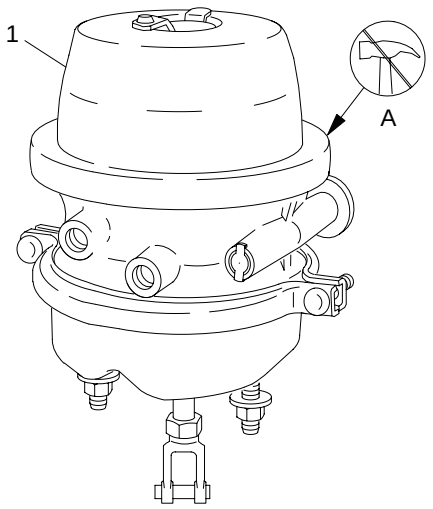

02/22/2000 f421352

A. Do not remove this clamp ring.
1. Brake Chamber

Fig. 8.8, Brake Chamber and Clamp Ring (MGM TR series)

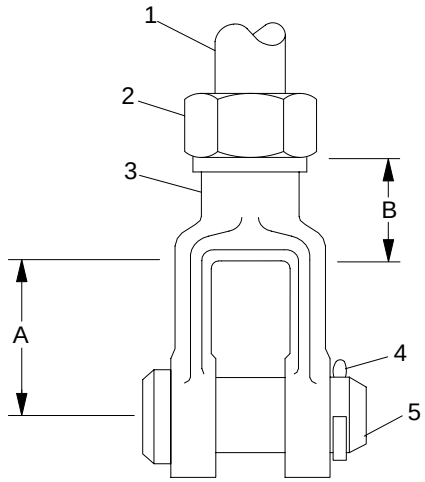

08/20/93 f420225a

A. Minimum of 1 inch (25 mm) of clearance between center line of clevis pin hole and piston rod end.
B. Minimum of 7 threads engagement.

1. Piston Rod
2. Piston Rod Nut
3. Clevis
4. Cotter Key
5. Clevis Pin

Fig. 8.9, Piston Rod Engagement with the Clevis

26.5 Check for hose damage caused by abrasion. If a hose is abraded, replace it. Check for the cause of the abrasion, such as loose or damaged hose clamps. Repair or replace the clamps as needed.

26.6 Observe the hose cover condition, especially hoses exposed to water splash and ice. If any hose is dried out or ragged (the wire or liner is showing through the cover), replace the hose.

26.7 Inspect the front air brake lines for leaks at the fitting where they enter the air chamber.

With an assistant at the front wheels to inspect the brake lines, turn the wheels to full lock in one direction. While holding the service brake pedal down, inspect the front brake air lines closely where they enter the air chambers.

Turn the wheels to full lock in the other direction, hold the service brake pedal down, and repeat the inspection.

If there is a leak, the hose should be replaced.See **Group 42** of the *School Bus Chassis Workshop Manual* for the hose replacement procedure.

26.8 Inspect air tubing, especially tubing made of nylon. In cold weather, nylon tubing is sensitive to damage, such as nicks or cuts. Replace nicked or cut tubing, even if it is not leaking.

26.9 Check the bend radii of all hoses. See **Fig. 8.10**. The minimum bend radius of a hose is that bend which the hose will withstand without experiencing damaging stresses or kinking. For minimum bend radius values, see **Group 42** of the *School Bus Chassis Workshop Manual*.

When a rubber hose bend does not meet minimum radius requirements, the outside may appear smooth even if the inner tube is kinked. Reroute the hose or replace it with one of adequate length if the bend radius is not within minimum specifications.

26.10 Check straight hose installations (those hoses that do not bend along their routings). Pressure changes can cause a hose to lengthen up to two percent, or shorten up to four percent. A 100-inch (2540-mm) length of hose, for example, can contract to 96 inches (2440 mm). If the hose has no slack when it is exhausted of air, replace it with one of adequate length to avoid a possible blow-off from the fitting during vehicle operation.

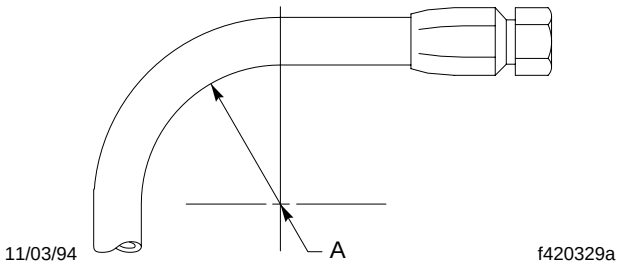

NOTE: The center of the hose bend radius should be well away from the fitting.

A. Bend Radius

Fig. 8.10, Bend Radius

26.11 Check for kinked or twisted hoses. A seven-percent twist in the hose can reduce its life by up to 90 percent. Also, a twisted hose under pressure tends to untwist. This could cause it to loosen the fitting. Reconnect hoses that are twisted.

27. *Check the brake lining wear on vehicles equipped with air brakes. Proper brake operation is dependant on periodic maintenance and inspection of the brake linings.*

27.1 Set the parking brake, and chock the tires to prevent vehicle movement.

27.2 If the axle assembly is not equipped with a dust shield or backing plate, measure the axle brake lining thickness. If *any* of the brake linings are worn to less than 1/4 inch (6.5 mm) at the thinnest point, replace the linings on *all* brake assemblies on that axle. See **Group 42** of the *School Bus Chassis Workshop Manual* for lining replacement instructions and camshaft endplay inspection.

27.3 If the axle assembly is equipped with a dust shield or backing plate, remove the inspection plugs to inspect the brake lining thickness. If *any* of the brake linings are worn to less than approximately 1/4 inch at the thinnest point, replace the linings on *all* brake assemblies on that axle. See **Group 42** of the *School Bus Chassis Workshop Manual* for lining replacement instructions and camshaft endplay inspection.

27.4 Install the inspection plugs in the dust shields or backing plates, if so equipped.

27.5 Remove the chocks from the tires.

28. *Make sure that the brakes are adjusted on all axles.*

Adjust the brakes if necessary. See **Group 42** of the *School Bus Chassis Maintenance Manual* for checking and adjusting procedures.

IMPORTANT: Brake checking and adjusting is necessary for all vehicles, including those equipped with automatic slack adjusters.

29. *Check the tire inflation pressures and inspect each tire for bulges, cracks, cuts, and punctures.*

    IMPORTANT: The load and cold inflation pressure must not exceed the rim or wheel manufacturer's recommendations, even though the tire may be approved for a higher load or inflation. Some rims and wheels are stamped with a maximum load and maximum cold inflation rating. See **Group 40** of the *School Bus Chassis Workshop Manual* for the correct tire inflation pressure for the vehicle load or consult the rim or wheel manufacturer if they are not stamped. If the load exceeds the maximum rim or wheel capacity, the load must be adjusted or reduced.

    29.1 Check the inflation pressures of the tires before each trip using an accurate tire pressure gauge. See **Fig. 8.11**. Check the tires when cool. Be sure that valve stem caps are on every tire and that they are screwed on finger-tight. Inflate the tires to the correct pressures if needed.

    See the tire manufacturer's recommendations for the correct tire inflation pressures for the vehicle load.

    Overinflation gives the treaded surface of the tire a convex shape. See **Fig. 8.12**. This causes extreme tire wear in the middle part of the tire since this section is primarily in contact with the road.

    Underinflation gives the tread surface a concave shape. See **Fig. 8.12**. This causes excessive tire wear on the outer edges of the tire since they are primarily in contact with the road.

⚠ WARNING

Do not operate the vehicle with underinflated or overinflated tires. Incorrect inflation can stress the tires and make the tires and rims more susceptible to damage, possibly leading to rim or tire failure and loss of vehicle control, resulting in serious personal injury or death.

    29.2 If a tire has been run flat or underinflated, check the wheel for proper lockring and side ring seating, and possible wheel, rim, or tire damage before adding air.

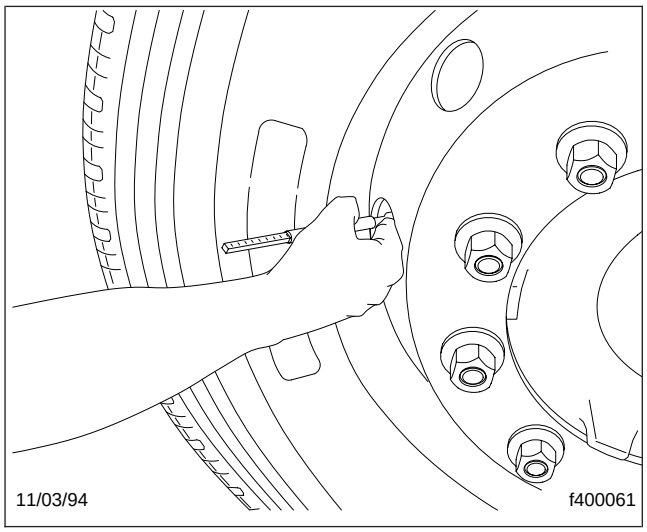

Fig. 8.11, Check Tire Inflation Pressures

29.3 Moisture inside a tire can result in body ply separation or a sidewall rupture. During tire inflation, compressed air reservoirs and lines must be kept dry. Use well-maintained inline moisture traps and service them regularly.

29.4 Inspect the tires for bulges, cracks, cuts, or penetrations. A tire pressure check will assist in uncovering hidden damage. A weekly pressure loss of 4 psi (28 kPa) or more in a tire may indicate damage. Inspect and repair or replace the tire.

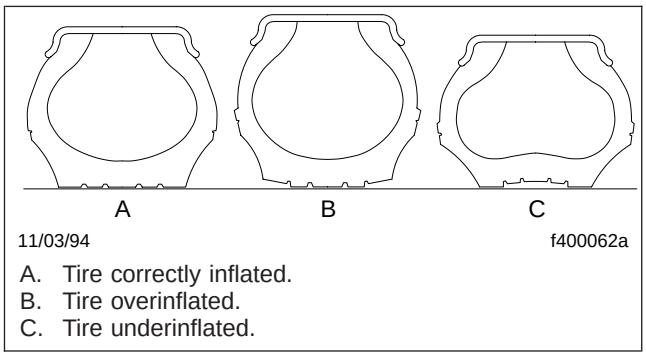

Fig. 8.12, Check for Proper Tire Inflation

29.5 If the tires are wearing irregularly, rotate them. If the front steering axle tires become irregularly worn, move them to the drive axle. See **Fig. 8.13**. Have the front axle alignment checked to determine the cause of irregular tire wear. In a dual assembly, if one tire wears faster than its mate, reverse the position of the two tires. See **Fig. 8.14**.

Government regulations require the removal of front axle tires at 4/32-inch (3-mm) remaining tread depth and rear axle tires at

2/32-inch (1.5-mm) remaining tread depth. However, front axle tires may be rotated to the drive axles to use the remaining 2/32-inch (1.5-mm) tread rubber.

See **Group 40** of the *School Bus Chassis Workshop Manual* for additional information on tire matching, spacing of dual tires, and causes of abnormal tire wear.

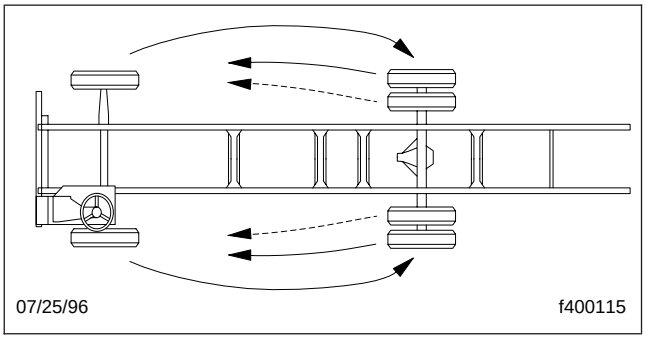

Fig. 8.13, Front Axle to Rear Axle Rotation

29.6 Also inspect tires for oil contamination. Fuel oil, gasoline, and other petroleum derivatives, if allowed to contact the tires, will soften the rubber and destroy the tire.

30. *Check for indications of loose wheel nuts or rim nuts and examine each wheel component.*

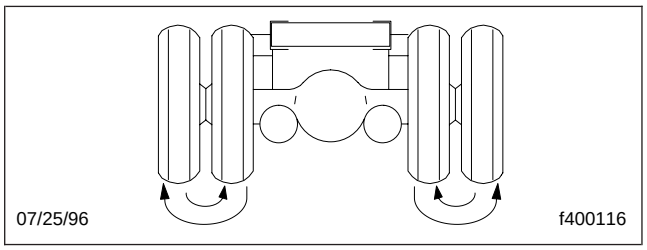

Fig. 8.14, Dual Assembly Rotation

Check the wheel nuts or rim nuts for indications of looseness. Remove all dirt and foreign material from the assembly. Dirt or rust streaks from the stud holes, metal buildup around stud holes, or out-of-round or worn stud holes, may be caused by loose wheel nuts. See the *School Bus Chassis Maintenance Manual* for torque specifications and the correct tightening sequences.

Examine the wheel assembly components (including rims, rings, flanges, studs, and nuts) for cracks or other damage.

See **Group 33** and **Group 35** of the *School Bus Chassis Workshop Manual* for service procedures for the studs and hubs, and **Group 40** of the *School Bus Chassis Workshop Manual* for wheel and tire servicing. Replace broken, cracked, badly worn, bent, rusty, or sprung rings and rims. Be sure

that the rim base, lockring, and side ring are matched according to size and type.

WARNING

Have any worn or damaged wheel components replaced by a qualified person using the wheel manufacturer's instructions and the wheel industry's standard safety precautions and equipment. Otherwise a vehicle or workshop accident could occur, possibly resulting in serious personal injury or death.

CAUTION

Insufficient wheel nut (rim nut) torque can cause wheel shimmy, resulting in wheel damage, stud breakage, and extreme tire tread wear. Excessive wheel nut torque can break studs, damage threads, and crack discs in the stud hole area. Use the recommended torque values and follow the proper tightening sequence.

31. *Check air brake system components for correct operation as follows:*

    31.1 Release the parking brake by pushing in the parking brake control valve knob. Check the air governor cut-in and cut-out pressures. Run the engine at fast idle. The air governor should cut out the air compressor at approximately 125 psi (862 kPa). With the engine idling, make a series of foot valve applications. The air governor should cut in the air compressor at approximately 95 psi (655 kPa). If the air governor does not cut in and out as described above, adjust it to these specifications. If the air governor cannot be adjusted or repaired, replace it before operating the vehicle.

    31.2 Check the air pressure buildup time as follows:

    Release the parking brake by pushing in the parking brake control valve knob.

    With the air system fully charged to 125 psi (862 kPa), make one full brake application and note the air pressure reading on the gauge. Continue to reduce the air pressure by moderate brake applications to a maximum of 90 psi (620 kPa), then run the engine at governed rpm. If the time required to raise the air pressure to 125 psi (862 kPa) is more than 30 seconds, eliminate any leaks or replace the air compressor before operating the vehicle.

    31.3 Check the air pressure reserve. With the air system fully charged to 125 psi (862 kPa), stop the engine and note the air pressure.

Then make one full brake application and observe the pressure drop. If it drops more than 25 psi (172 kPa), all areas of leakage must be eliminated before operating the vehicle.

⚠ WARNING

Before operating the vehicle, be sure that the parking brake passes the following tests. Otherwise an unexpected parking brake application could occur, causing some loss of vehicle control and possibly resulting in serious personal injury.

31.4 Check the air leakage in the system.

With the parking brake applied, the transmission out of gear, and the tires chocked, charge the air system until a cutoff pressure of 125 psi (862 kPa) is reached.

With the service brakes released, shut down the engine, wait one minute and note the air pressure gauge reading. Observe the air pressure drop in psi (kPa) per minute.

Charge the air system until a cutoff pressure of 125 psi (862 kPa) is reached. With the parking brake released and the service brake applied, shut down the engine, wait one minute and note the air pressure gauge reading. Observe the air pressure drop in psi (kPa) per minute.

If leakage exceeds the limits shown in **Table 8.1**, repair all areas of leakage before driving the vehicle.

Maximum Allowable Service Brake Air Leakage in psi (kPa) Per Minute	
Released	**Applied**
2 (14)	3 (21)

Table 8.1, Maximum Allowable Service Brake Air Leakage

32. *Test the service brakes before leaving the lot.*

Depress the brake pedal, release the parking brake, and check that the brake system warning light goes out. If the warning light remains on after releasing the parking brake, correct the problem before driving off.

If equipped with air brakes, test the brakes (when starting to move the vehicle and before picking up speed) with the foot valve and parking brake valve to be sure that they will bring the vehicle to a safe stop.

33. *Test the parking brakes on a 20-percent grade.*

Apply the hand brake or pull the parking brake control valve knob with the vehicle on a 20-percent grade (the ramp surface should be made of Portland cement or the equivalent). If the parking brake does not hold the vehicle, repair the parking brake system.

9

In an Emergency

Hazard Warning Lights

The hazard warning light tab is located on the turn signal lever. See **Fig. 9.1**. To operate the hazard lights, pull the tab out. All of the turn signal lights and both of the indicator lights on the control panel will flash.

Push the tab in to cancel the hazard warning lights.

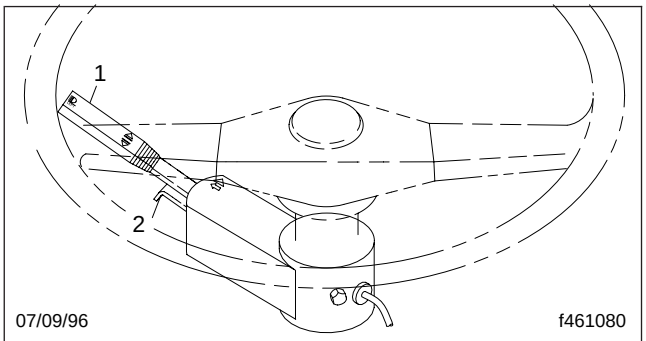

1. Turn Signal Lever
2. Hazard Warning Light Tab

Fig. 9.1, Hazard Warning Light Tab

Towing

WARNING

Do not tow an unbraked vehicle if the combined weight of both vehicles is more than the sum of the gross axle weight ratings (GAWR) of the towing vehicle. Otherwise brake capacity will be inadequate, which could result in personal injury or death.

IMPORTANT: When it is necessary to tow the vehicle, follow the instructions below closely to prevent damage to the vehicle.

When towing or pushing any vehicle equipped with an Allison transmission, disconnect the driveshaft at the rear axle and support it as necessary, regardless of the distance or speed traveled.

Front Towing Hookup

1. Disconnect the battery ground cable.
2. If the vehicle is to be lifted and towed, remove the driveaxle shafts.

CAUTION

Failure to remove the axle shafts when towing the vehicle with the rear wheels on the ground could result in damage to the transmission and other parts.

3. Cover the ends of the hubs with metal plates or plywood cut to fit the axle opening and drilled to fit the axle shaft studs. This prevents lubricant from leaking out, and will keep contaminants from getting into the axle lubricant and damaging the wheel bearings.

WARNING

Due to the many variables that exist in towing, positioning the lifting and towing device is the sole responsibility of the tow vehicle operator. The operator must be familiar with standard towing industry safety measures. Improper procedures could result in personal injury or death.

4. Attach the towing device.
5. Lift the vehicle, and secure the safety towing chains. If additional clearance is needed, remove the front wheels.
6. Connect the clearance lights, taillights, and signal lights. Connect any special towing lights required by local regulations.

WARNING

Before releasing the parking brakes, make the connection to the towing vehicle or chock the tires on the disabled vehicle. Failure to do so could result in hazardous conditions because the vehicle could suddenly roll and injury could occur.

CAUTION

Before attempting to tow a vehicle with an air suspension (and during the towing operation), ensure that the air suspension is properly charged. Charge the suspension through the Schrader valve on the air dryer. Attempting to tow a vehicle with an improperly charged air suspension may result in damage to the chassis and body.

7. Release the parking brake.

Rear Towing Hookup

1. Position the front tires so that they point straight ahead and secure the steering wheel in this position.

2. Disconnect the battery ground cable.

WARNING

Due to the many variables that exist in towing, positioning the lifting and towing device is the sole responsibility of the tow vehicle operator. The operator must be familiar with standard towing industry safety measures. Improper procedures could result in personal injury or death.

3. Attach the towing device.
4. Lift the vehicle, and secure the safety towing chains.
5. Connect the clearance lights, taillights, and signal lights. Also connect any special towing lights required by local regulations.

CAUTION

Before attempting to tow a vehicle with an air suspension (and during the towing operation), ensure that the air suspension is properly charged. Charge the suspension through the Schrader valve on the air dryer. Attempting to tow a vehicle with an improperly charged air suspension may result in damage to the chassis and body.

Emergency Starting With Jumper Cables

When using jumper cables, follow the instructions below.

WARNING

Batteries release explosive gas. Do not smoke when working around batteries. Put out all flames and remove all sources of sparks or intense heat in the vicinity of the battery. Do not allow the vehicles to touch each other. Do not lean over the batteries when making connections, and keep all other persons away from the batteries. Failure to follow these precautions could lead to severe personal injury as a result of an explosion or acid burns.

CAUTION

Make sure both starting systems have the same voltage outputs, and avoid making sparks. Otherwise the vehicle charging systems could be severely damaged. Also, do not attempt to charge isolated, deep-cycle batteries with jumper cables. Follow the manufacturer's instructions when charging deep-cycle batteries.

1. Set the parking brake and turn off the lights and all other electrical loads.
2. Connect one end of a jumper cable to the positive terminal of the booster battery, and connect the other end of the cable to the positive terminal of the discharged battery. See **Fig. 9.2**.

WARNING

Do the next step exactly as instructed and do not allow the clamps of one cable to touch the clamps of the other cable. Otherwise, a spark could occur near a battery, possibly resulting in severe personal injury from explosion and acid burns.

3. Connect one end of the second jumper cable to the negative terminal of the booster battery, and connect the other end of the cable to a ground at least 12 inches (300 mm) away from the batteries of the vehicle needing the start. The vehicle frame is usually a good ground. Do *not* connect the cable to or near the discharged batteries.
4. Start the engine of the vehicle with the booster batteries, and let the engine run for a few minutes to charge the batteries of the other vehicle.

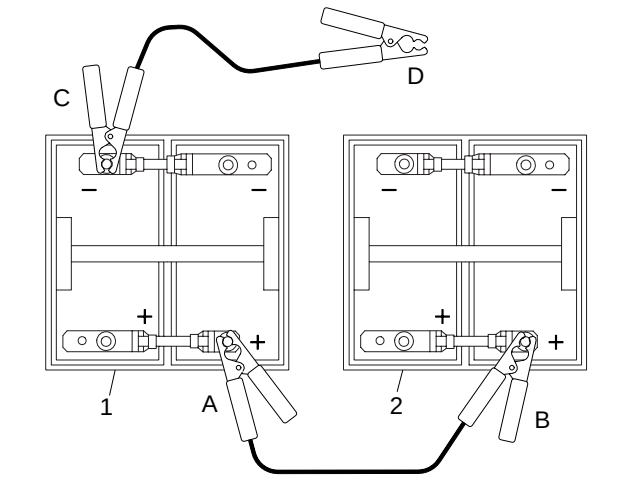

A. 1st
B. 2nd
C. 3rd
D. To Frame (ground)
1. Booster Battery
2. Discharged Battery

Fig. 9.2, Jumper Connections

CAUTION

Don't crank the engine for more than 30 seconds at a time during any of the following procedures. Wait

two minutes after each try to allow the starter to cool. Failure to do so could cause starter damage.

5. Attempt to start the engine of the vehicle with the batteries receiving the charge.
6. When the engine starts, let it idle for a few minutes.

WARNING

Do the next step exactly as instructed and do not allow the clamps of one cable to touch the clamps of the other cable. Otherwise, a spark could occur near a battery, possibly resulting in severe personal injury from explosion and acid burns.

7. Disconnect the grounded cable from the frame or other non-battery location; then disconnect the other end of the cable.
8. Disconnect the remaining cable from the newly charged battery first; then disconnect the other end.

Running Out of Fuel

WARNING

Do not mix gasoline or alcohol with diesel fuel. This mixture could cause an explosion. When filling fuel tanks, do not smoke or use an open flame near the fuel tanks. Combustion of diesel fuel oil or fuel vapors could result, possibly causing personal injury or property damage.

1. If possible, stop the vehicle on a level surface, away from traffic.
2. Set the parking brake.
3. See the engine manufacturer's manual for instructions.
4. Call the Freightliner Customer Assistance Center at 1–800–385–4357 or 1–800–FTL–HELP.

CAUTION

Don't crank the engine for more than 30 seconds at a time during any of the following procedures. Wait two minutes after each try to allow the starter to cool. Failure to do so could cause starter damage.

5. Start the engine.

Changing a Flat Tire

IMPORTANT: If a flat tire occurs while driving, gradually decrease vehicle speed. Holding the steering wheel firmly, move to a safe place on the side of the road.

1. If possible, stop the vehicle on a level surface, away from traffic.
2. Apply the parking brake and place the transmission in Park (P) or Neutral (N), for automatic transmissions, or in First (1) gear for manual transmissions. Turn the ignition switch to the OFF position.
3. Turn on the emergency flashers.
4. Block the wheel diagonally opposite the wheel being changed.
5. Remove the spare wheel, jack, jack handle, and lug wrench from storage.

NOTE: The jacking point for the front and rear wheels is directly under the axle.

6. Place the jack on a solid surface. Insert the jack handle and pump the handle slightly. *Do not raise the wheel off of the ground yet.* Loosen the wheel lug nuts, but do not remove them.

IMPORTANT: The dual rear wheels are attached using two-element lug nuts. The larger nut retains the outer dual. The inner square stud retains the inner dual. Remove and install these nuts separately. The rear dual outer lug nut must be loosened to check and retighten the inner nut.

7. Raise the vehicle until the wheel is off of the ground. Remove the lug nuts and the wheel.
8. Install the spare wheel and lug nuts. Make sure that the beveled sides of the nuts face inward, or, on hub-piloted wheels, make sure that the hub-pilot pad is centered at the top.
9. In a star pattern, tighten the nuts evenly until snug.
10. See **Group 40** of the *School Bus Chassis Workshop Manual* for wheel tightening patterns and torque specifications. Lower the vehicle until the wheel touches the ground. Tighten the nuts.
11. Finish lowering the vehicle to the ground, then remove the jack.
12. Remove the block, then stow the jack, jack handle, and lug wrench.
13. After operating the vehicle for 50 to 100 miles (80 to 160 km), retighten the wheel nuts to the specified torque values.

10

Specifications

Replacement Light Bulbs

See **Table 10.1** for a listing of replacement light bulbs.

Replacement Light Bulbs	
Light Location	**Part Number**
Headlight, Rectangular, Halogen	WEE H6054
Headlight, Rectangular, Standard	WEE 6052
Front Turn Signal Light	WEE 1156
Front Side Marker Light	WEE 193
Instrument Panel Light	WEE 161
Rocker Switch Light	SPR 904 404

Table 10.1, Replacement Light Bulbs

Fluids and Lubricants

See **Table 10.2** for a listing of fluid and lubricant specifications.

IMPORTANT: For vehicles with extended warranties (and equipped with automatic transmissions), use only TranSynd synthetic ATF.

Fluid and Lubricant Specifications	
Component	**Recommended Fluid or Lubricant**
Front Axle Spindle Pins, Tie Rods, Drag Link, Intermediate Steering Shaft, Front Brake and Clutch Cable Pedal Shafts, Slip Spline and Universal Joints	Multipurpose Grease Lithium 12 Hydroxy Stearate NLGI No. 2; for temperatures below 0°F (-18°C), use MIL-G-10924B
Hydraulic Brake Master Cylinder	Heavy-Duty DOT 3 Brake Fluid
Brake and Clutch Pedal Pivots	Starplex 2 (lithium soap-based grease)
Engine Oil	SAE 15W-40 HD
Transmission:	
Eaton/Fuller	SAE 40 or 50 above +10°F (-12°C); SAE 30 below +10°F (-12°C)
Allison *	Dexron III ATF
Fuel	Grade No. 2-0 or 2-D Diesel Fuel
Brake Caliper V-Ways and Anchor Plate Rails	Aeroshell Grade 5 (ES-1246)
Rear Axle Differential	Hypoid Gear Oil API Service Classification GL-5

Fluid and Lubricant Specifications	
Component	**Recommended Fluid or Lubricant**
Engine Coolant	50% Water/50% Ethylene Glycol Antifreeze †

* For vehicles with extended warranties, use only TranSynd synthetic ATF.
† See **Group 20** of the *School Bus Chassis Maintenance Manual* for Freightliner specifications.

Table 10.2, Fluid and Lubricant Specifications

Fuse/Relay/Circuit Breaker Identification

NOTE: The fuse/relay/circuit breaker panel is located on the right side of the dash. Depending on vehicle options, fuse/relay/circuit breaker locations may vary. See **Fig. 10.1** or **Table 10.3** for fuse/relay/circuit breaker locations and identification.

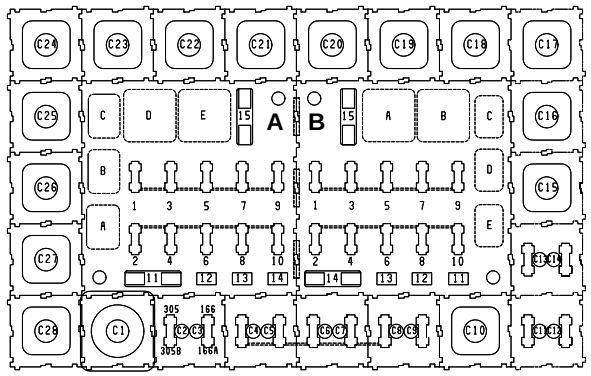

06/13/96 f541287

Fig. 10.1, Fuse/Relay/Circuit Breaker Panel

Fuse/Relay/Circuit Breaker Identification			
Pos. No.	**Description**	**Part Number**	**Rating**
AA	Ignition Bus/Standard Circuits	680 545 00 05	—
AB	Parking Brake Relay/ DRL	680 545 00 05	—
AC	Ignition Bus/Optional Circuits	680 545 00 05	—
AD	Brake Light Relay	23-11276-011	—

Fuse/Relay/Circuit Breaker Identification			
Pos. No.	Description	Part Number	Rating
A2	Fuel Solenoid/Backup Lights	231284 000010 680 545 19 66	10A Fuse 10A C.B.
A4	Fan Clutch Relay	231284 000010 680 545 19 66	10A Fuse 10A C.B.
A6	Instrument Panel Feed	231284 000010 680 545 19 66	10A Fuse 10A C.B.
A8	Hydraulic Brakes	231284 000005	5A Fuse
A10	Relay Coil Feeds	231284 000010 680 545 19 66	10A Fuse 10A C.B.
A15	Ignition Controlled Relay, to Optional Ignition Bus	680 545 01 34 680 545 12 66	20A Fuse 20A C.B.
BA	Fog Light Relay	23-11276-011	—
BB	Taillight/Marker Lights Relay	23-11276-011	—
BC	Panel Light Relay	680 545 00 05	—
BD	Headlight Relay, Right	680 545 00 05	—
BE	Headlight Relay, Left	680 545 00 05	—
B1	Taillights	231284 000015 680 545 20 66	15A Fuse 15A C.B.

Fuse/Relay/Circuit Breaker Identification			
Pos. No.	Description	Part Number	Rating
B2	Panel Lights	231284 000015 680 545 20 66	15A Fuse 15A C.B.
B3	Fog Lights	LF 257 020 680 545 21 66	20A Fuse 20A C.B.
B4	Stoplight Switch	231284 000015 680 545 16 66	15A Fuse 15A C.B.
B5	Daytime Running Lights, Battery Feed	LF 257 020 680 545 17 66	20A Fuse 20A C.B.
B6	Horn	231284 000015 680 545 20 66	15A Fuse 15A C.B.
B7	Turn Signal Flasher	LF 257 020 680 545 21 66	20A Fuse 20A C.B.
B8	Ignition Switch, Battery Feed	231284 000015 680 545 20 66	15A Fuse 15A C.B.
B9	Headlight, Right	231284 000015 680 545 16 66	15A Fuse 15A C.B.
B10	Headlight, Left	231284 000015 680 545 16 66	15A Fuse 15A C.B.

Fuse/Relay/Circuit Breaker Identification			
Pos. No.	**Description**	**Part Number**	**Rating**
B14	Ignition Controlled Relay, to Standard Ignition Bus	680 545 01 34 680 545 12 66	20A Fuse 20A C.B.
C1	Hazard Warning Flasher: Thermal Solid State	 681 822 00 21 680 822 00 21	 — —
C2	Accessory Feed	231284 000010 680 545 19 66	10A Fuse 10A C.B.
C3	Ether Start	231284 000010 680 545 19 66	10A Fuse 10A C.B.
C4	Fuel/Water Separator, Battery Power	LF 257 020 680 545 21 66	20A Fuse 20A C.B.
C5	Diagnostic Connector, Battery Power	231284 000005 680 545 19 66	5A Fuse 10A C.B.
C6	Hydraulic ABS, Battery Power	231284 000005 680 545 19 66	—
C10	Fuel/Water Separator Relay	23-11276-011	—
C15	Automatic Transmission Modulator	PAC14100455	—

Fuse/Relay/Circuit Breaker Identification			
Pos. No.	**Description**	**Part Number**	**Rating**
C17	ABS Relay	23-11276-011	—
C18	ABS Relay	23-11276-011	—
C19	ABS Relay	23-11276-011	—
C20	ABS Relay	23-11276-011	—

Table 10.3, Fuse/Relay/Circuit Breaker Identification

Index

Index