Introduction

This manual provides information needed to operate and understand the chassis and its components. More detailed information is contained in the *Owner's Warranty Information for North America* booklet, and in the vehicle's workshop and maintenance manuals.

Custom-built Freightliner chassis are equipped with various chassis and cab components. Not all of the information contained in this manual applies to every chassis. If parts on your chassis differ from those shown, they may have been installed by the body builder.

The safety or performance of your vehicle could be adversely affected by the installation of nonstandard components. Note the limitations and specifications provided in the vehicle and chassis manuals, and consult your selling dealer before making any alterations to the vehicle or chassis.

For your reference, keep this manual in the vehicle at all times.

IMPORTANT: Descriptions and specifications in this manual were in effect at the time of printing. For the most up-to-date information, visit **freightliner.com** for the latest version of the driver's and maintenance manuals. Freightliner Custom Chassis Corporation reserves the right to discontinue models and to change specifications or design at any time without notice and without incurring obligation. Descriptions and specifications contained in this publication provide no warranty, expressed or implied, and are subject to revisions and editions without notice.

Environmental Concerns and Recommendations

Whenever you see instructions in this manual to discard materials, you should first attempt to reclaim and recycle them. To preserve our environment, follow appropriate environmental rules and regulations when disposing of materials.

IMPORTANT: Modifications to fuel systems, emission related components, or air conditioning systems may constitute a noncompliant EPA or CARB vehicle and such actions are prohibited.

Event Data Recorder

This vehicle is equipped with one or more devices that record specific vehicle data. The type and amount of data recorded varies depending on how the vehicle is equipped (such as the brand of engine, if an air bag is installed, or if the vehicle features a collision avoidance system, etc.).

This vehicle is equipped with an event data recorder (EDR). The main purpose of an EDR is to record data in certain crash or near-crash situations, such as air bag deployment or hitting a road obstacle, that will assist in understanding how a vehicle's systems performed. The EDR is designed to record data related to vehicle dynamics and safety systems for approximately 60 seconds. This data can help provide a better understanding of the circumstances in which crashes and injuries occur. Data recorded includes the following items:

- how various systems in the vehicle were operating
- engine system information
- how far (if at all) the driver was depressing the accelerator
- if the driver was depressing the brake pedal
- how fast the vehicle was traveling

NOTE: Data is not recorded by the EDR under normal driving conditions. Personal data such as name, gender, age, and crash location are not recorded. However, other parties such as law enforcement could combine the EDR data with the type of personally identifying data routinely acquired during a crash investigation.

To read data recorded by an EDR, special equipment is required, and access to the vehicle or the EDR is needed. In addition to the vehicle manufacturer, other parties that have the special equipment, such as law enforcement, can read the information if they have access to the vehicle or the EDR.

Emissions and Fuel Efficiency Compliance

This vehicle must be regularly inspected and maintained as indicated in the *Walk-In Van Chassis Maintenance Manual*, and in the *Pre- and Post-Trip Inspections and Maintenance* chapter in this manual, in

STI-471-7 (06/18/2022)
A24-01451-000
Printed in U.S.A.

order to continue satisfactory performance and ensure coverage of the vehicle under the manufacturer's warranty.

Many maintenance procedures ensure that the vehicle and engine continue to comply with applicable emissions standards. Maintenance procedures, using components engineered to comply with greenhouse gas emissions and fuel efficiency regulations, may be performed by an authorized Daimler Truck North America dealer, an independent outlet, or the vehicle owner or operator.

The vehicle owner is responsible for determining the suitability of replacement components to maintain compliance with federal and local jurisdictional regulations. Components including, but not limited to, low-rolling resistance tires are specifically designed and manufactured to exacting standards for regulatory fuel efficiency and greenhouse gas emissions compliance. It is important that these components are always replaced with components that meet or exceed the performance of the originally installed components.

Customer Assistance Center

Having trouble finding service? Call the Customer Assistance Center at 1-800-385-4357 or 1-800-FTL-HELP. Call night or day, weekdays or weekends, for dealer referral, vehicle information, breakdown coordination, or Fleetpack assistance. For specification requests and all other concerns and inquiries, the Customer Assistance Center is available 24 hours a day, seven days a week. Our people are knowledgeable, professional, and committed to following through to help you keep your vehicle moving.

Reporting Safety Defects

Vehicles domiciled in the USA that are thought to have a defect which could cause a crash or could cause injury or death, you should immediately inform the National Highway Traffic Safety Administration (NHTSA) in addition to notifying Freightliner Custom Chassis Corporation.

If the NHTSA receives similar complaints, it may open an investigation, and if it finds that a safety defect exists in a group of vehicles, it may order a recall and remedy campaign. However, NHTSA cannot become involved in individual problems between you, your dealer, or Freightliner Custom Chassis Corporation.

To contact NHTSA, call the Vehicle Safety Hotline toll-free at 1-888-327-4236 (TTY: 1-800-424-9153).

To e-mail NHTSA, go to **www.safercar.gov**.

Contact NHTSA by mail at: Administrator, NHTSA Headquarters, 1200 New Jersey Avenue SE, West Building, Washington, DC 20590.

For more information about motor vehicle safety, go to **www.safercar.gov**.

To contact Freightliner Custom Chassis Corporation regarding a concern about a specific vehicle, call the Customer Assistance Center at 1-800-385-4357 or 1-800-FTL-HELP.

Vehicles domiciled in Canada that are thought to have a defect that could cause a crash, injury, or death, should immediately be reported to Transport Canada and Freightliner Custom Chassis Corporation.

If Transport Canada receives similar complaints, it may open an investigation; if it finds that a safety defect exists in a group of vehicles, it may order a recall and remedy campaign. However, Transport Canada cannot become involved in individual problems between you, your dealer, or Freightliner Custom Chassis Corporation.

To contact Freightliner Custom Chassis Corporation regarding concerns about a specific vehicle, call the Customer Assistance Center at 1-800-385-4357 or 1-800-FTL-HELP.

To contact Transport Canada, call the Defect Investigations and Recalls Division toll-free in Canada at 1-800-333-0510 or 1-819-994-3328 in the Gatinuau-Ottawa area or internationally.

Contact Transport Canada by mail at: Transport Canada, 330 Sparks Street, Ottawa, Ontario, K1A 0N5 Canada.

The following websites contain more information on Canadian recalls:

English: **www.tc.gc.ca/recalls**.

French: **www.tc.gc.ca/rappels**.

STI-471-7 (06/18/2022)
A24-01451-000
Printed in U.S.A.

Foreword

For additional road safety information, visit the Road Transportation website:

English: **www.tc.gc.ca/en/services/road**

French: **www.tc.gc.ca/fr/services/routier**

© 1997–2022 Daimler Truck North America LLC. All rights reserved. Daimler Truck North America LLC is a Daimler company.

No part of this publication, in whole or part, may be translated, reproduced, stored in a retrieval system, or transmitted in any form by any means, electronic, mechanical, photocopying, recording, or otherwise, without the prior written permission of Daimler Truck North America LLC. For additional information, please contact Daimler Truck North America LLC, Service Systems and Documentation, P.O. Box 3849, Portland OR 97208-3849 U.S.A. or refer to **www.Daimler-TrucksNorthAmerica.com** and **www.FreightlinerChassis.com**.

STI-471-7 (06/18/2022)
A24-01451-000
Printed in U.S.A.

Contents

Chapter		Page
	Introduction, Environmental Concerns and Recommendations, Event Data Recorder, Emissions and Fuel Efficiency Compliance, Customer Assistance Center, Reporting Safety Defects	Foreword
1	Vehicle Identification	1.1
2	Ametek Instrument Panel	2.1
3	OptiView Instrument Panel	3.1
4	Instruments	4.1
5	Controls	5.1
6	Engines	6.1
7	Transmissions	7.1
8	Steering System	8.1
9	Hydraulic and Air Brake Systems	9.1
10	Compressed Natural Gas Fuel System	10.1
11	Pre- and Post-Trip Checklists	11.1
12	Pre- and Post-Trip Inspections and Maintenance	12.1
13	Cleaning and Care	13.1
14	In an Emergency	14.1
15	Towing	15.1
16	DRIVEFORCE Gasoline Engine	16.1
17	Electric Vehicle	17.1
18	Specifications	18.1
	Index	I.1

1

Vehicle Identification

Component Information Label 1.1
Vehicle Identification Number (VIN) 1.1
Emissions Labels 1.1

Component Information Label

NOTE: Labels shown in this chapter are examples only. Actual specifications may vary from vehicle to vehicle.

The component information label lists the manufacturer, month and year of manufacture, vehicle identification number (VIN), gross vehicle weight rating (GVWR), front and rear gross axle weight ratings (GAWR), and tire and wheel information. It also indicates if the vehicle has been certified as compliant with Federal Motor Vehicle Safety Standard (FMVSS). See **Fig. 1.1**.

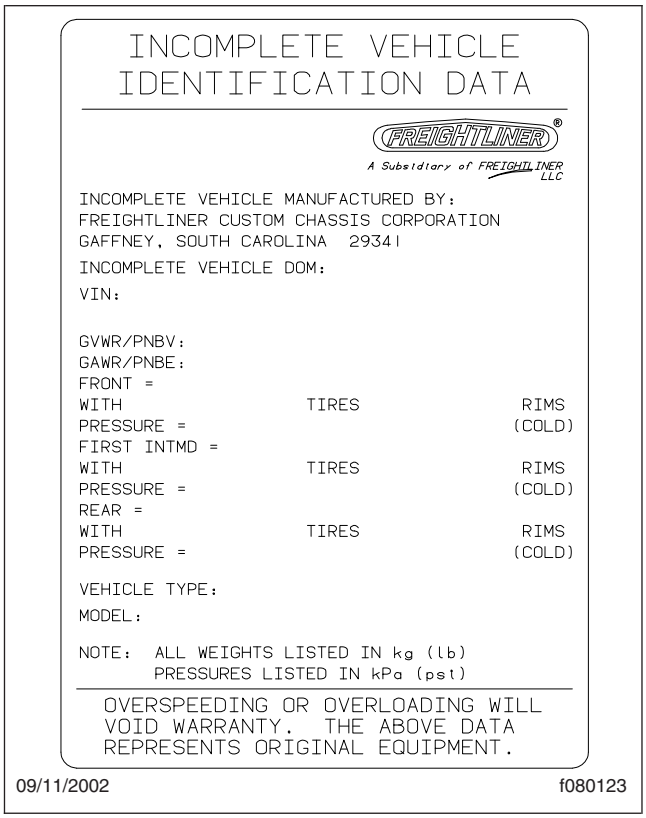

Fig. 1.1, Component Information Label

The tire and rim portion of the component information label certifies suitable tire and rim combinations that can be installed on the vehicle for the given gross axle weight rating. Tires and rims installed on the vehicle at the time of manufacture may have a higher load capacity than that certified by the tire and rim label. If the tires and rims currently on the vehicle have a lower load capacity than that shown on the tire and rim label, then the tires and rims determine the load limitations on each of the axles.

Incomplete vehicles intended for service in the U.S. have an incomplete vehicle certification label attached by the final-stage manufacturer. This label will be attached to the incomplete vehicle document included with the vehicle, and certifies that the vehicle conforms to all applicable FMVSS regulations in effect on the date of completion.

Vehicle Identification Number (VIN)

The chassis vehicle identification number is permanently attached to the chassis in the engine compartment (depending on vehicle options, usually on the metal panel where the steering driveline enters the engine compartment). See **Fig. 1.2**. The last six digits are the chassis serial number. The chassis number is stamped on the left frame rail, over the front axle. A VIN label is also mounted by the body builder. Mounting locations vary, to include the glove box. See **Fig. 1.3**.

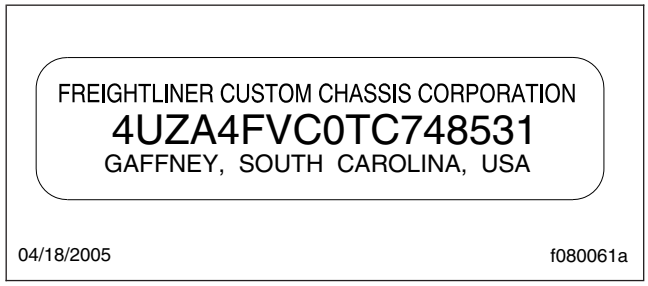

Fig. 1.2, Vehicle Identification Number (VIN) Label

NOTE: Always include the chassis serial number (last six digits of the VIN) when communicating with Daimler Trucks North America.

Emissions Labels

Aftertreatment System Indicators Label

Model year 2007 and later diesel engines in vehicles domiciled in the U.S. or Canada are required to meet all EPA exhaust gas emission regulations effective as per the applicable emission model year, and are equipped with an emission aftertreatment system (ATS). Vehicles domiciled outside of the U.S. and Canada may not have aftertreatment equipment, depending upon local statutory emissions guidelines.

A reference label included with the driver's documentation package contains important warning indicators

regulations.

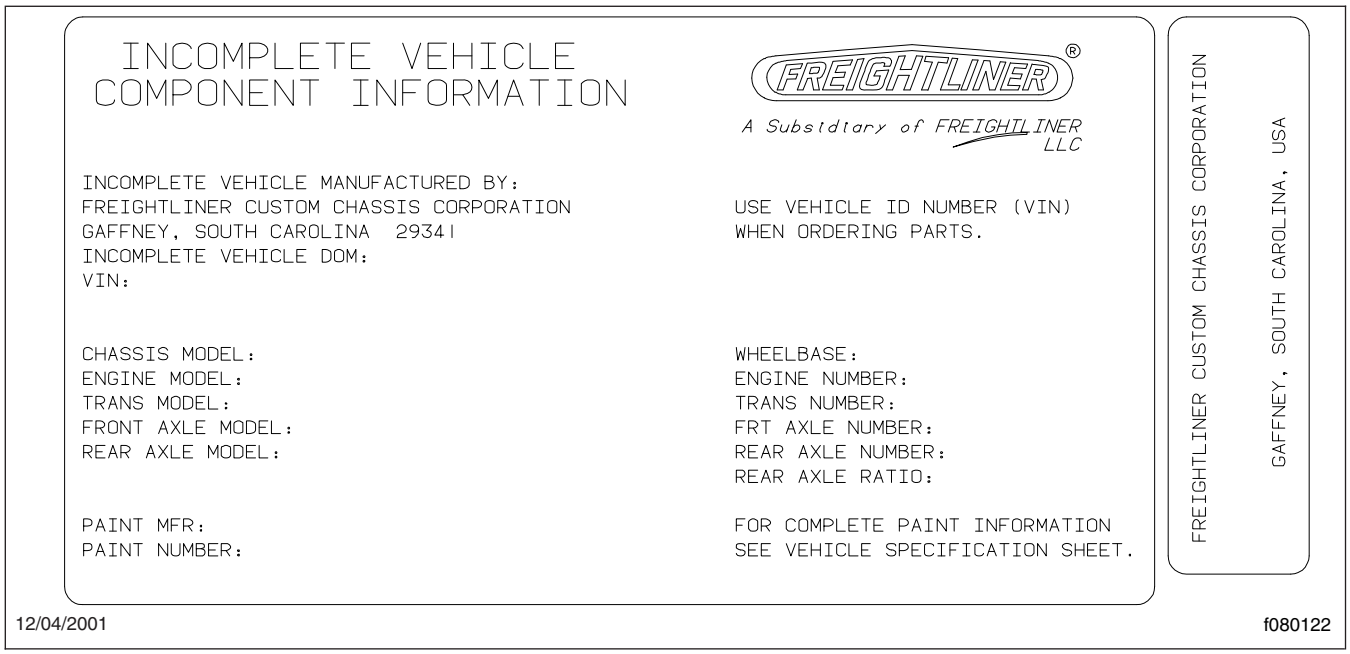

Fig. 1.3, Vehicle Identification Number Label, Typical

in the instrument cluster that pertain to the ATS. See **Fig. 1.4**. See **Table 1.1** and **Table 1.2** for additional EPA information.

It is a violation of U.S. federal law to alter exhaust plumbing, ATS, or other components in any way that would bring the engine/vehicle out of compliance with certification requirements [Ref: 42 U.S.C. S7522(a)(3)]. It is the owner's responsibility to maintain the vehicle so that it conforms to EPA regulations.

Vehicle Emission Control Information Label

Model year 2013 and later vehicles meet requirements as specified by GHG14, GHG17 and GHG21 regulations, respectively. These vehicles are equipped with components that increase fuel efficiency and reduce greenhouse gas (GHG) emissions. Components may include, but are not limited to, low-rolling resistance tires; aerodynamic devices such as hood, vehicle speed limiters; and idle shutdown timers.

A Vehicle Emission Control Information Label indicates compliance with emission regulations. See **Fig. 1.5**. Among other GHG relevant information the label indicates the emission model year of the vehicle. It is the owner's responsibility to maintain the vehicle so that it conforms to EPA and National Highway Traffic Safety Administration (NHTSA)

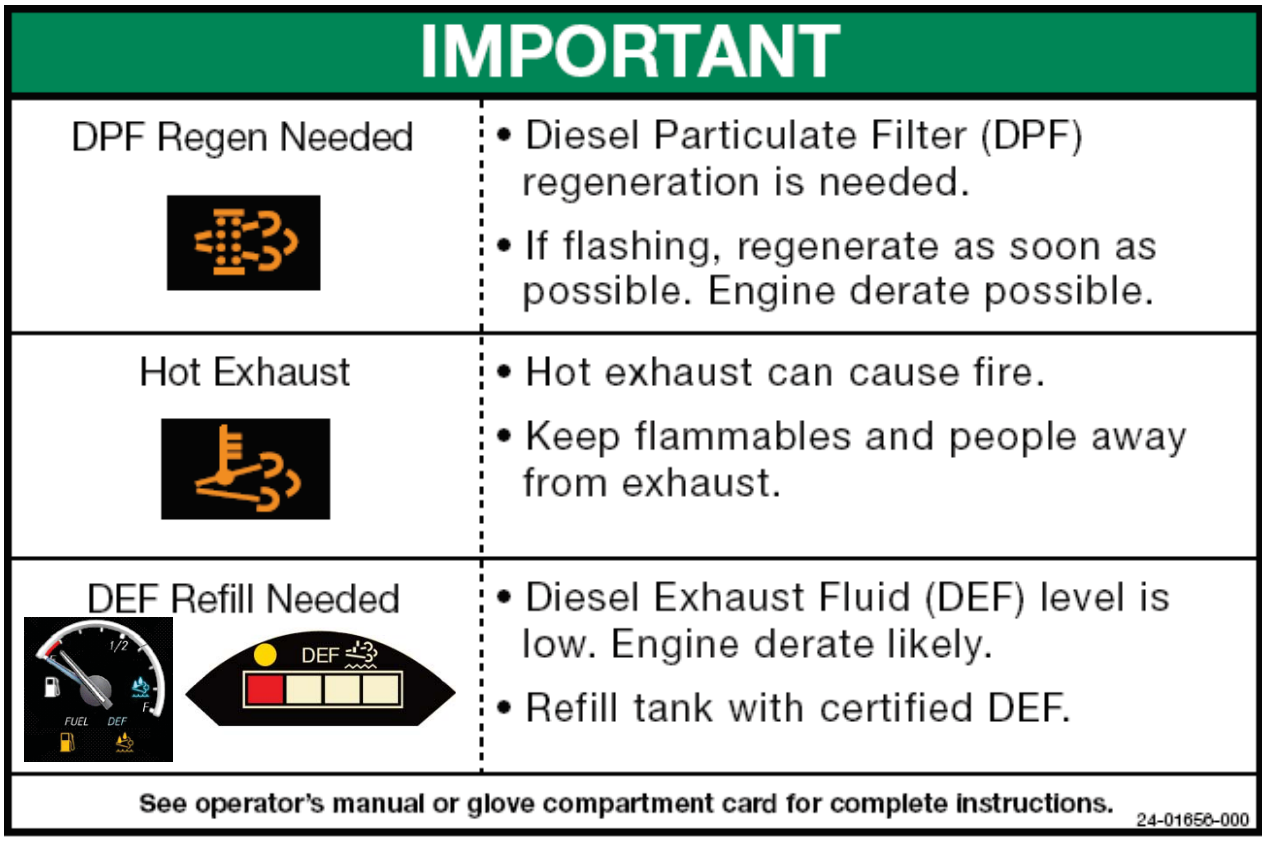

Fig. 1.4, ATS Indicators

EPA Regulations	
Regulation	**Emissions Components**
EPA07 (Reduction of nitrogen oxides (NOx) emissions to 1.1 g/bhp-hr, and particulate matter emissions to 0.01 g/bhp-hr)	Aftertreatment device (ATD) containing a diesel particulate filter that traps soot and ash.*
EPA10 (Reduction of NOx emissions to 0.2 g/bhp-hr)	EPA07-type ATD, with additional selective catalyst reduction (SCR) technology that utilizes diesel exhaust fluid (DEF) to convert NOx to nitrogen and water vapor.
GHG14 (Reduction of greenhouse gas emissions)	Fuel efficiency components including, but not limited to, engines, tires, aerodynamic components, vehicle speed limiters, and idle reduction timers specifically designed to meet regulatory fuel efficiency and greenhouse gas emissions standards.
GHG17	Fuel efficiency components including, but not limited to, engines, tires, aerodynamic components, vehicle speed limiters, and idle reduction timers specifically designed to meet regulatory fuel efficiency and greenhouse gas emissions standards.
GHG21	GHG14/17 components plus additional components including, but not limited to, transmissions, axles, predictive technologies, idle reduction technologies for vocational vehicles, tire pressure monitoring systems.

* Cummins, Detroit, and Mercedes-Benz ATD's are also equipped with a diesel oxidation catalyst to break down pollutants.

Table 1.1, EPA Regulations

Emission Regulations by Model Year		
Model Year	**Engine Regulation**	**Vehicle Regulation**
2007–2009	EPA07	N/A
2010–2012	EPA10	N/A
2013–2015	EPA10, GHG14	GHG14
2016	EPA10, GHG17	GHG14
2017–2020	EPA10, GHG17	GHG17
2021–and later	EPA10, GHG21	GHG21

Table 1.2, Emission Regulations by Model Year

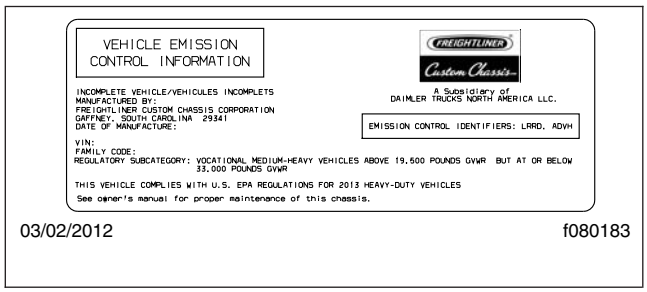

Fig. 1.5, Vehicle Emission Control Information Label

Certified Clean Idle Label

The California Air Resources Board (CARB) requires model year 2008 and newer heavy-duty diesel engines to meet CARB's Heavy-Duty Diesel Engine Idling Requirement in order to limit emissions of particulate matter and NOx.

Certified vehicles are equipped with a label placed near the bottom edge of the driver-side door. See **Fig. 1.6**.

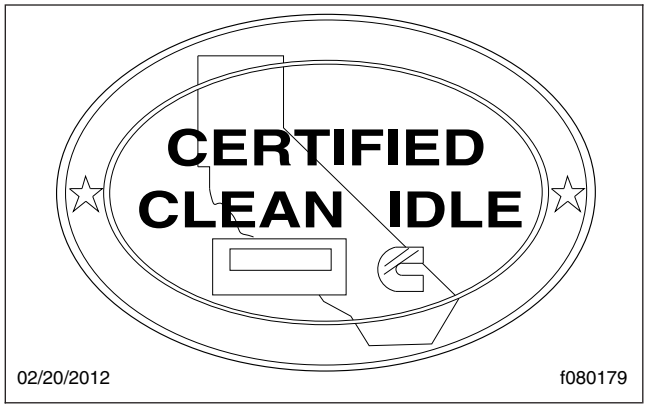

Fig. 1.6, CARB Clean Idle Label

2

Ametek Instrument Panel

Ametek Instrument Panel 2.1

Ametek Instrument Panel

The following information describes a typical instrument panel manufactured by Ametek. **Figure 2.1** shows an instrument panel for vehicles that are compliant with EPA10 and newer regulations.

NOTE: These instrument panels are shown with a standard U.S. speedometer, which shows miles per hour (mph) more prominently than kilometers per hour (km/h).

Message Display Center

The message display is a graphical, backlit, liquid crystal display (LCD) that relays information to the vehicle operator. The messages displayed include:

- Odometer
- Trip Odometer 1/Trip Odometer 2
- Chassis Battery Voltage
- Instantaneous Fuel Rate
- Average Fuel Rate
- Gear Attained Status
- Transmission Temperature
- Hour Meter
- Boost Pressure
- Engine Oil Pressure
- Coolant Temperature
- Fuel Level
- Percent Engine Load
- Engine RPM

During normal operation, the LCD displays the odometer value and chassis battery voltage on the top line, and driver selected parameters, such as the trip odometer and fuel rate, on the second and third lines.

Priority Messages

Priority messages (including warning messages) are displayed in the LCD due to various inputs or data messages. Unless noted otherwise, the priority message will take over the whole screen, allowing multiple messages to be displayed in five second intervals.

Self-Test

When the ignition is turned on, a required self-test automatically begins. Gauge needles will reset to zero during the self-test, and then immediately move to the position dictated by the data received. During this time, the warning lights, alarm (buzzer), and driver display screen will also perform a self-test.

NOTE: The driver can activate or deactivate the start-up self-test by accessing the setup menu.

Menu System

The menu system is shown on the driver display screen once the self-test is finished. The menu system responds to input from the driver and remains active as long as the ignition is on. In order for the driver to operate the menu system, the ignition must be ON, and the park brake must be set (ON). The main features of the menu system are described below.

- Setup—this is used to set various parameters, which are saved when the ignition is turned off. Setup has select display units, startup screen, LCD contrast, and reset parameters.
- Maintenance—shows various maintenance intervals such as engine oil, air filter, etc.
- Diagnostics—this is used for setting and reading inputs and outputs and checking the gauges. It also shows the hardware and software version of the instrument panel, and has menus to retrieve active error codes from the engine, transmission, and ABS controllers.

NOTE: It is not possible to highlight lines in the menu system screen. To get to the sections that can be highlighted, press the right arrow toggle button and hold it for two seconds. The display screen will change and the options shown can then be highlighted. Once a selection has been chosen and changes are made, press the right arrow toggle button to go back to the main message display screen.

Setup Menu

Select Display Units

The set units screen allows the driver to choose between English or metric units of measurement for the displayed values. To navigate to the set units screen, see **Fig. 2.2**, screens H, I, and J.

Startup Screen

The startup screen selection allows the driver to turn the startup screen on or off.

LCD Contrast

Select contrast from the menu to set the LCD contrast. Use the down toggle button to set the contrast to the desired level. To navigate to the contrast screen, see **Fig. 2.2**, screen M.

Reset Parameters

The reset parameters screen is included with vehicles that have the Allison transmission prognostics feature.

Maintenance Menu

The maintenance menu has the following three sub menus:

- maintenance intervals
- transmission oil life remaining
- transmission oil filter life monitor

Maintenance Intervals

The maintenance intervals menu allows the driver to set the change intervals for engine oil and engine air filter. If the intervals are set to zero, the maintenance warnings must be disabled.

Transmission Oil Life Remaining

If transmission prognostics are enabled, this menu indicates how much useful oil life remains.

Transmission Oil Filter Life Monitor

If transmission prognostics are enabled, the transmission oil filter life monitor tells the driver if the transmission oil filter is clogged and in need of repair. A message will appear on the display screen as TRANS OIL FILTER FUNCTIONAL or TRANS OIL FILTER CLOGGED.

Diagnostic Menu

The diagnostic menu contains the following items:

- engine faults
- transmission faults
- ABS faults
- check outputs
- odometer diagnostics
- check gauges
- check indicators (warning lamps)
- check LCD
- check binary inputs
- check analog inputs
- check datalink
- hardware/software version

All of the items in the diagnostic menu can be accessed by using the toggle buttons and selecting the auxiliary screens. Then navigate to the diagnostic sub-menu. Some of the more frequently used diagnostic menus are described further below.

Engine Faults

This screen displays engine fault codes that are received from the engine electronic control unit (ECU). To navigate to the engine fault screen, see **Fig. 2.3**, screen AA.

Transmission Faults

This screen displays transmission fault codes that are received from the transmission ECU. To navigate to the transmission fault screen, see **Fig. 2.3**, screen AB.

ABS Diagnostics

This screen displays Antilock Brake System (ABS) fault codes that are received from the ABS ECU. To navigate to the ABS diagnostic screen, see **Fig. 2.3**, screen AC.

Check Gauges

The check gauges screen allows the driver to set each gauge as a percentage of scale (either 0, 50, or 100%), as shown in the LCD. To navigate to the check gauges screen, see **Fig. 2.4**, AG screens.

Warning Lamp

The warning lamp screen allows the driver to test each warning lamp (not the vehicle load) on and then off, displaying the lamp name and status in the LCD. To navigate to the warning lamp screen, see **Fig. 2.4**, screen AH.

Check LCD

Selecting the check LCD screen displays the Freightliner Custom Chassis Corporation (FCCC) logo in

normal and reverse video three times and then returns to the menu. To navigate to the check LCD screen, see **Fig. 2.4**, screen AI.

Check Binary Inputs

The check binary inputs screen displays the pin number and status of each binary input. The toggle buttons allow the driver to select each binary input. This information is continuously updated to assist in troubleshooting. To navigate to the check binary inputs screen, see **Fig. 2.4**, screen AJ.

Check Analog Inputs

The check analog inputs screen displays the pin number and actual value of each analog input defined in the system. The toggle buttons allow the driver to select each analog input. This information is continuously updated to assist in troubleshooting. To navigate to the check analog input screen, see **Fig. 2.5**, screen AK.

Check Datalink

The check datalink screen allows the driver to view all devices that communicate on the J1939, J1587, and GMLAN datalinks. To navigate to the check datalink screen, see **Fig. 2.5**, screen AL.

Menu Navigation

The menu navigation road maps are provided to illustrate the screens that are available in the menu system. The paths to specific screens are shown, along with instructions for using the toggle buttons to move from one screen to another. Refer to the road maps to change items shown in lines one, two, and three of the display screen, view the setup screens, diagnostics, etc. See **Fig. 2.2**, **Fig. 2.3**, **Fig. 2.4**, **Fig. 2.5**, **Fig. 2.6**, **Fig. 2.7**, **Fig. 2.8**, **Fig. 2.9**, **Fig. 2.10**, **Fig. 2.11**, **Fig. 2.12**, **Fig. 2.13**, and **Fig. 2.14**.

IMPORTANT: Follow the steps below to change the three items (also known as favorites) shown in the message display center. The message display center is referred to as screen C in **Fig. 2.8**.

1. With the vehicle in park, turn the ignition to ON, and allow the self test to complete.
2. Press the down toggle button to select an item to change. The selected item will now be highlighted.
3. Press the right toggle button once to enter the favorites display menu, shown in **Fig. 2.8**, as screen D.
4. Use the down toggle button to scroll through the available items.
5. Highlight the new item, then press the right toggle button. The selected item will now appear in the message display center.

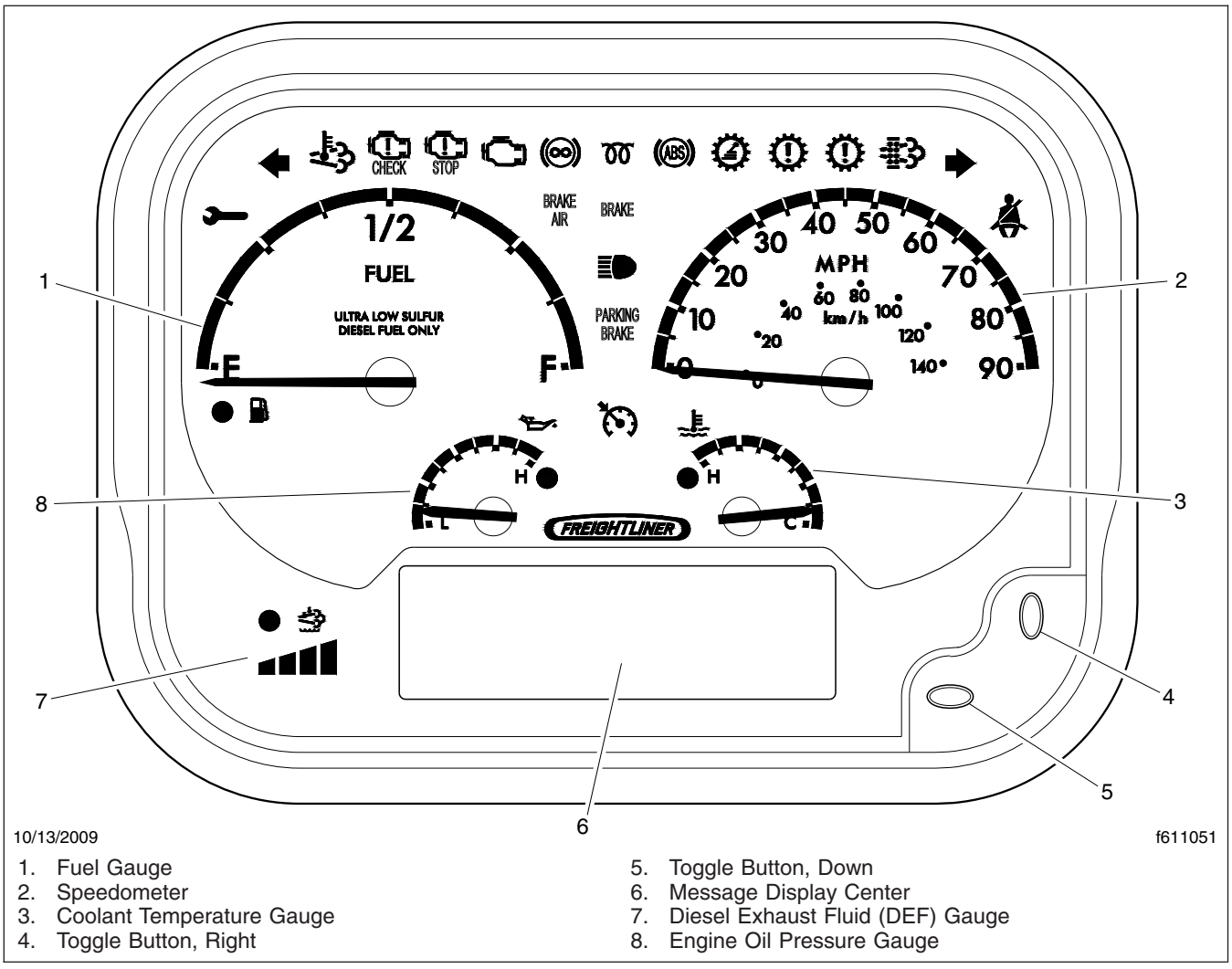

1. Fuel Gauge
2. Speedometer
3. Coolant Temperature Gauge
4. Toggle Button, Right
5. Toggle Button, Down
6. Message Display Center
7. Diesel Exhaust Fluid (DEF) Gauge
8. Engine Oil Pressure Gauge

Fig. 2.1, Typical Ametek Instrument Panel, EPA10 and Newer Engines

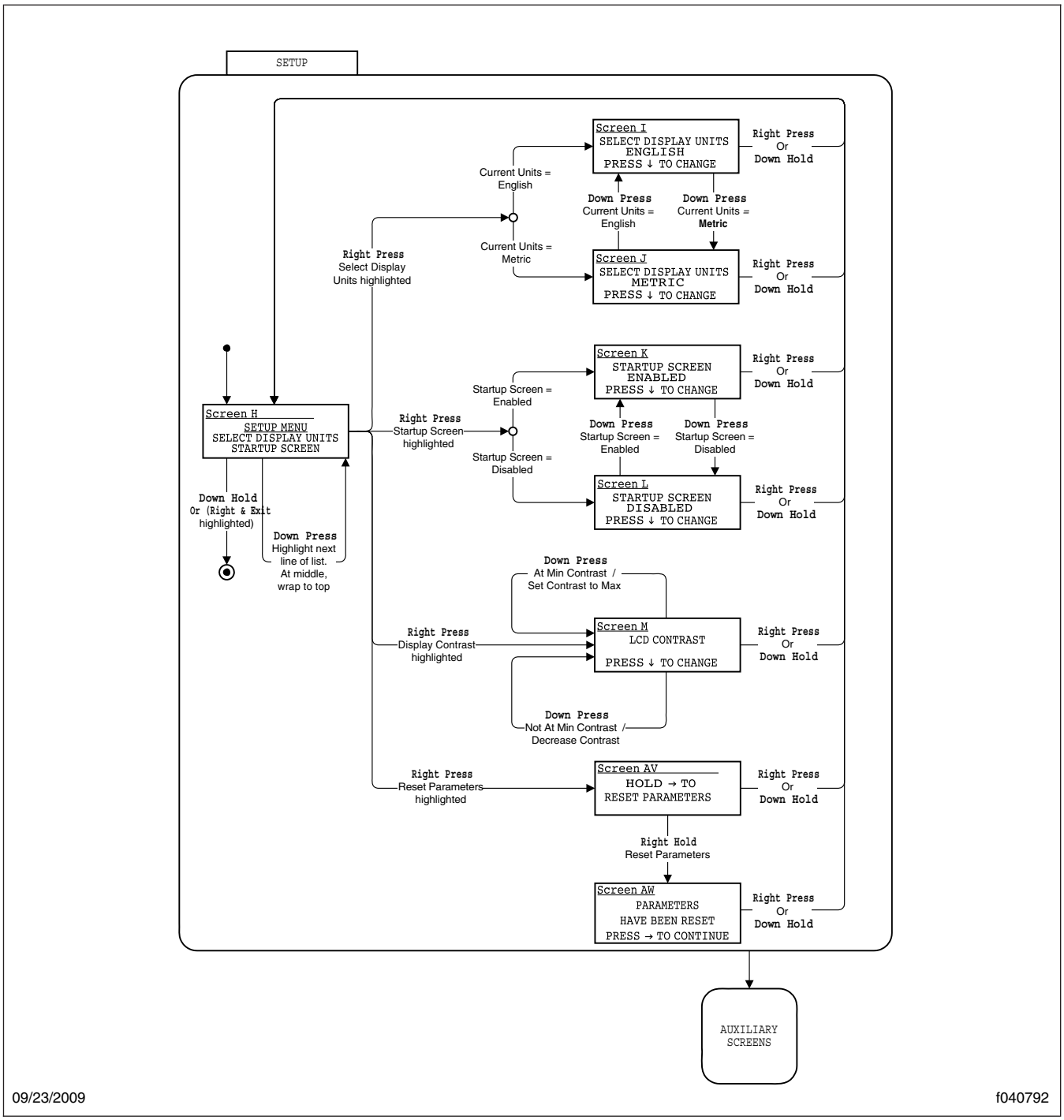

Fig. 2.2, Setup Menu Screens

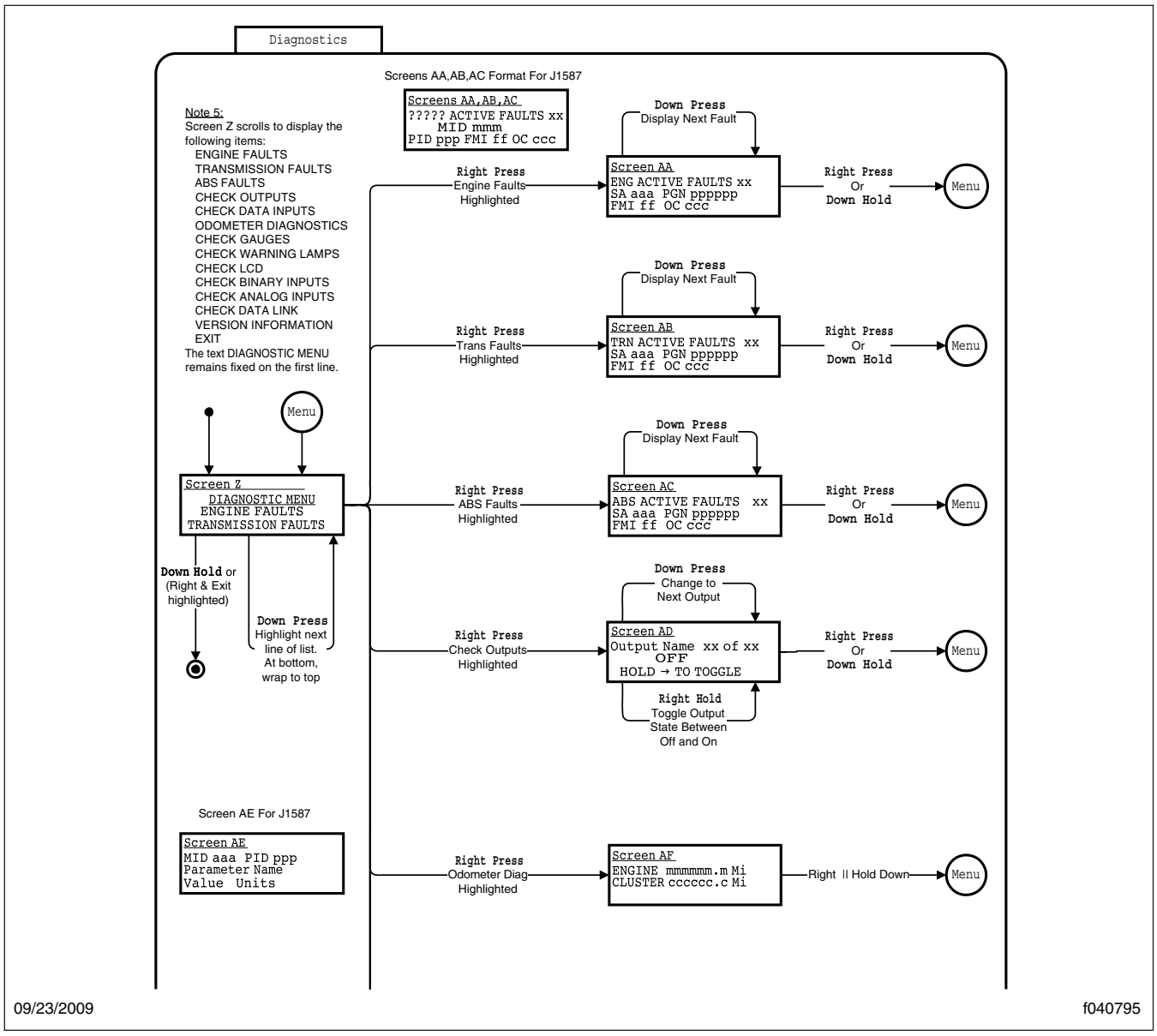

Fig. 2.3, Diagnostic Menu Screens, Screen 1

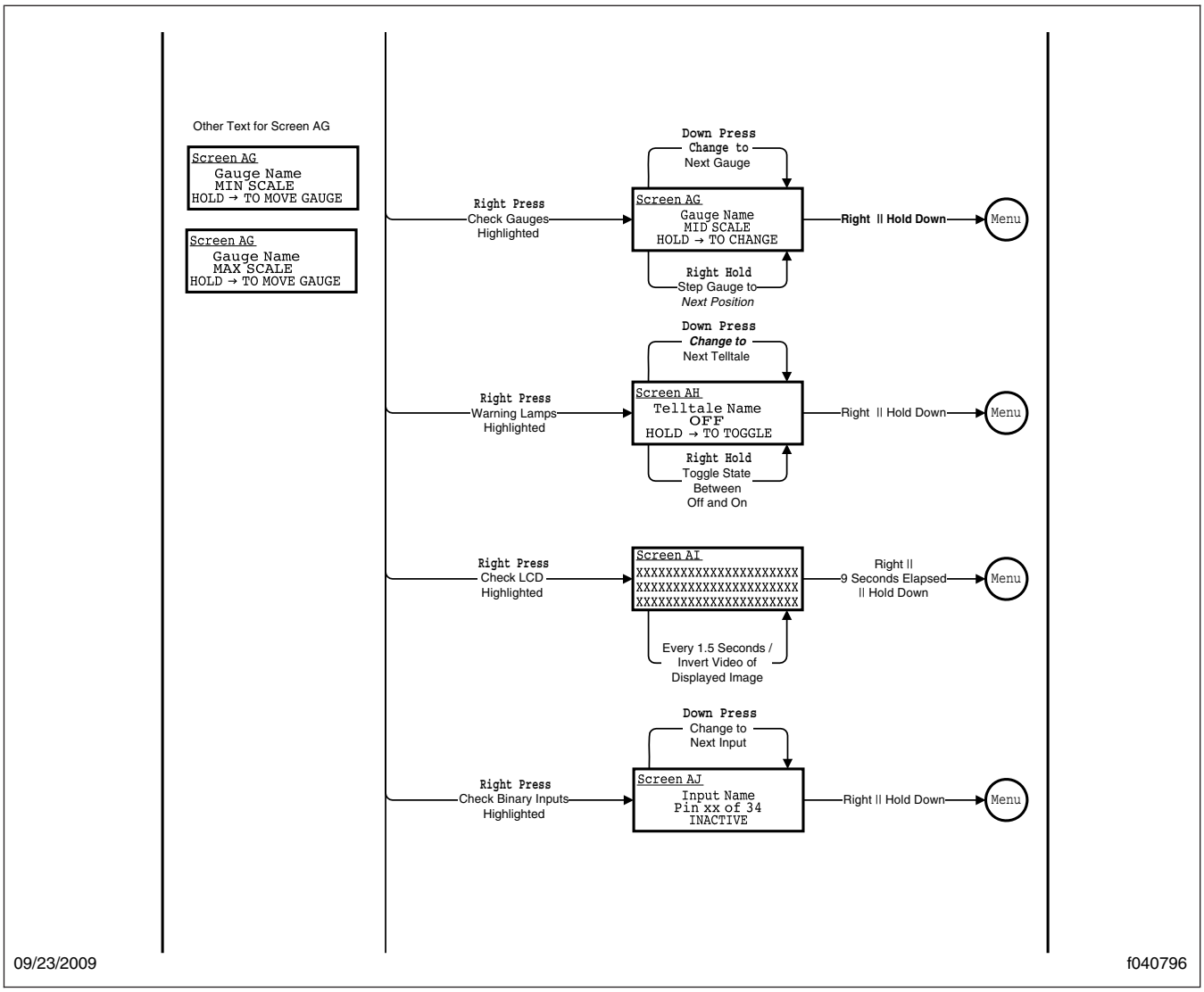

Fig. 2.4, Diagnostic Menu Screens, Screen 2

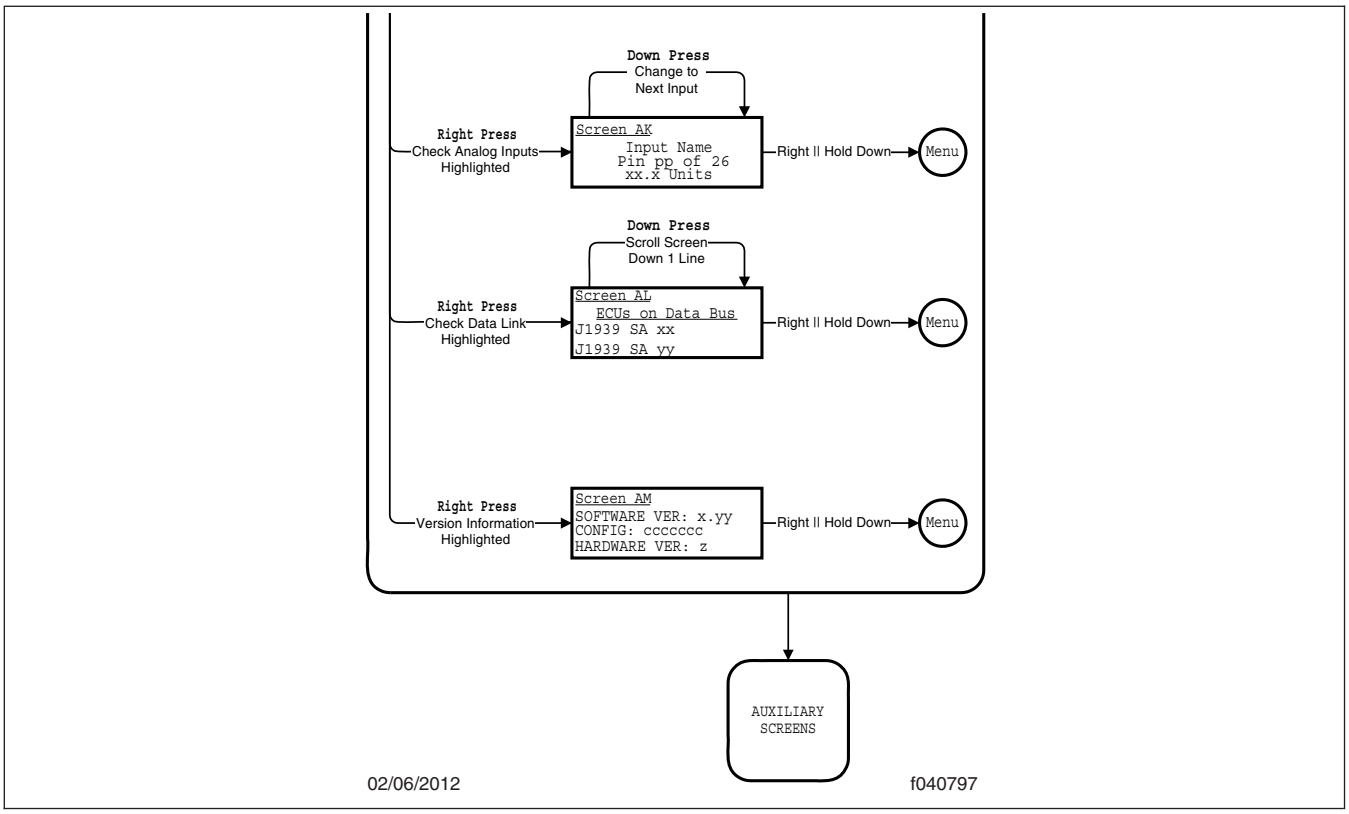

Fig. 2.5, Diagnostic Menu Screens, Screen 3

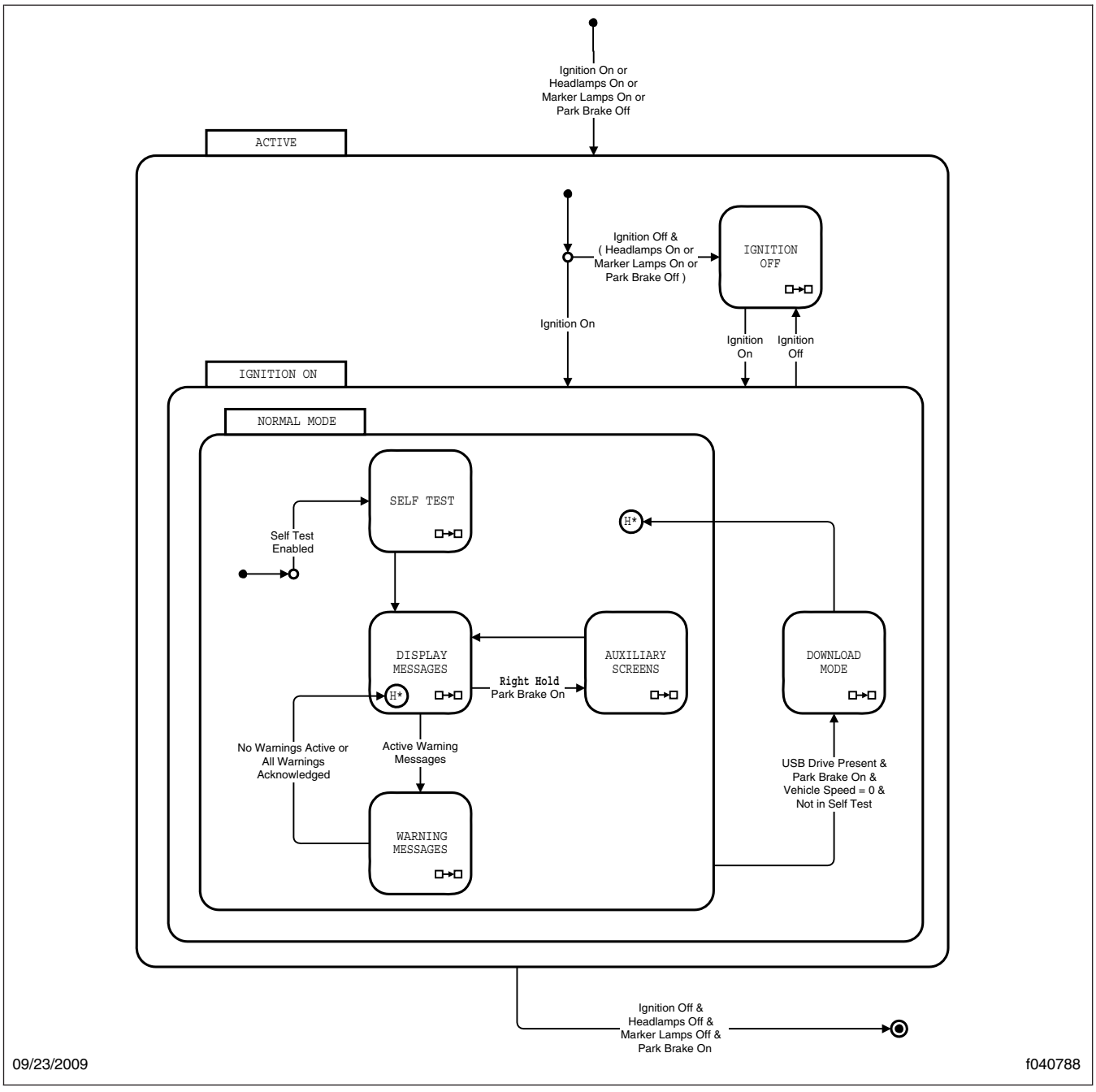

Fig. 2.6, Ignition On, Normal Mode

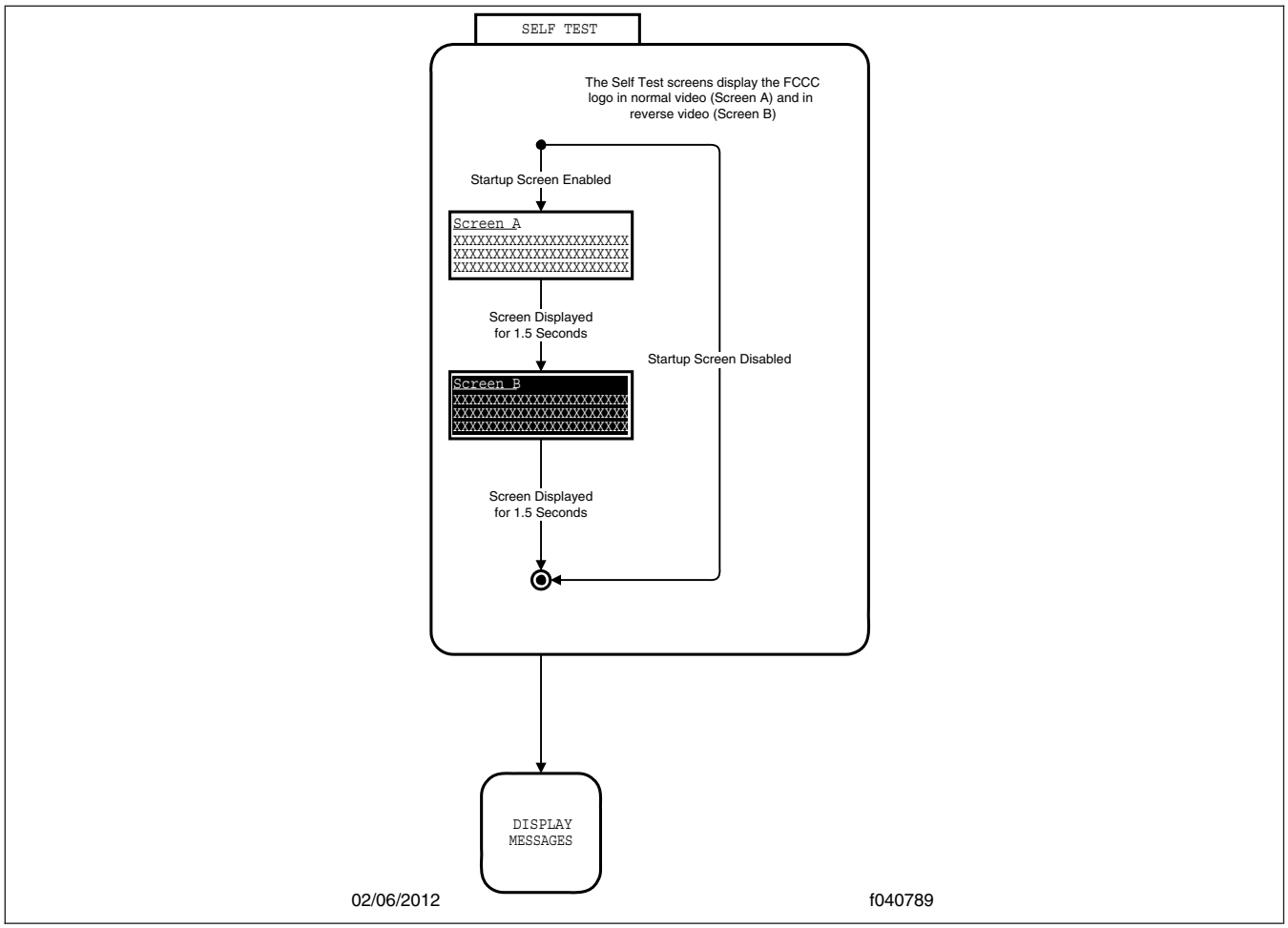

Fig. 2.7, Self Test

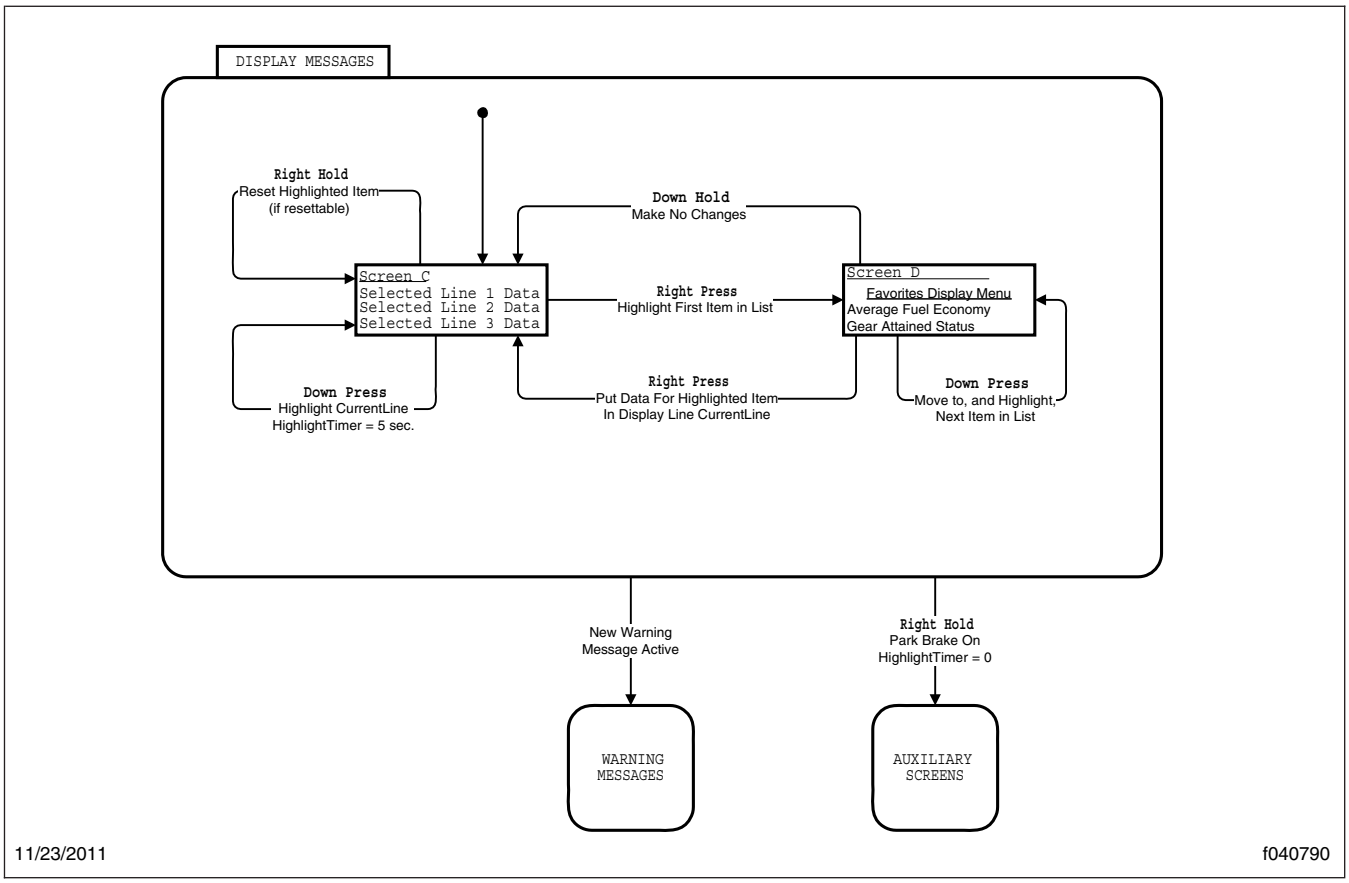

Fig. 2.8, Display Messages

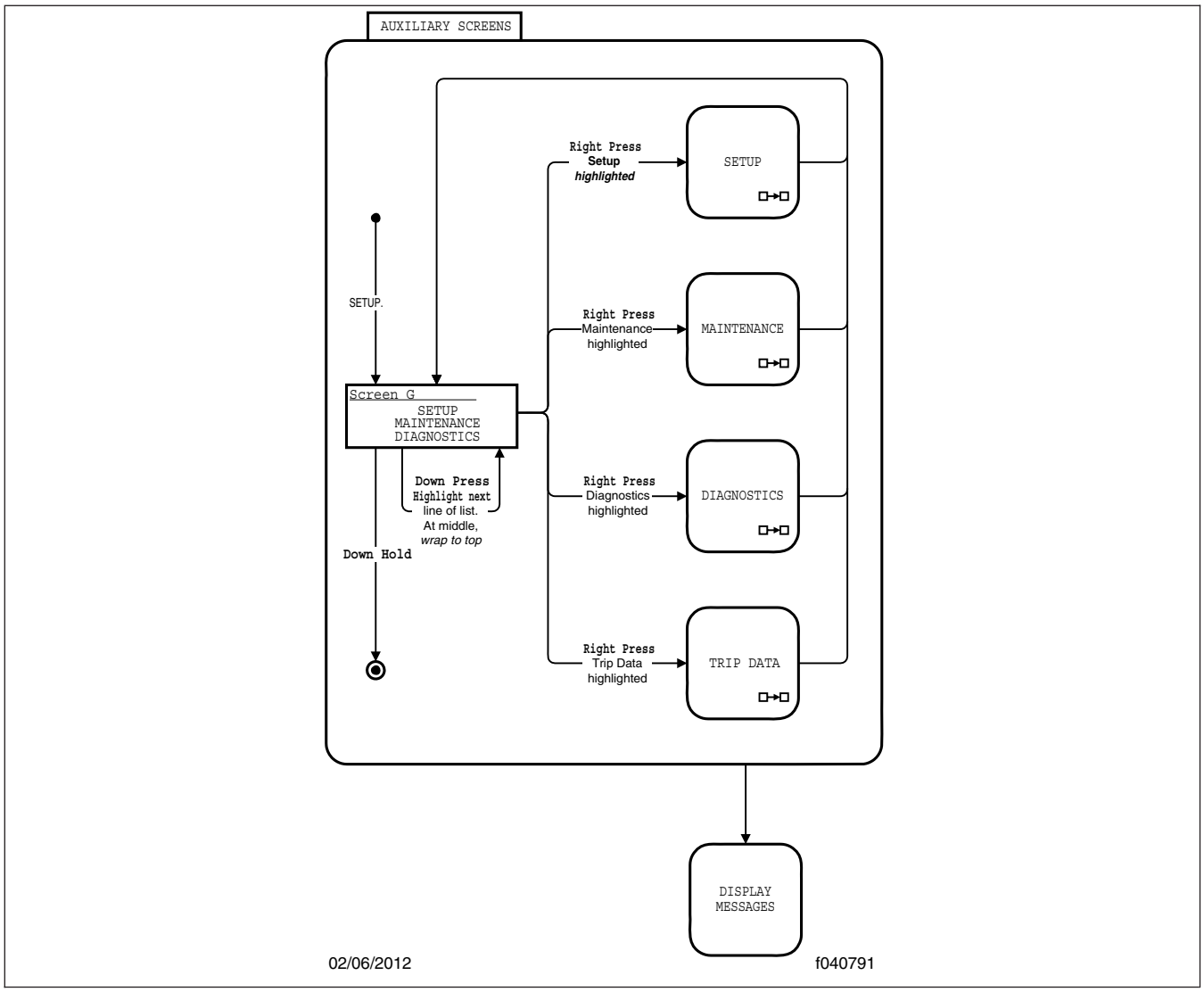

Fig. 2.9, Auxiliary Screens

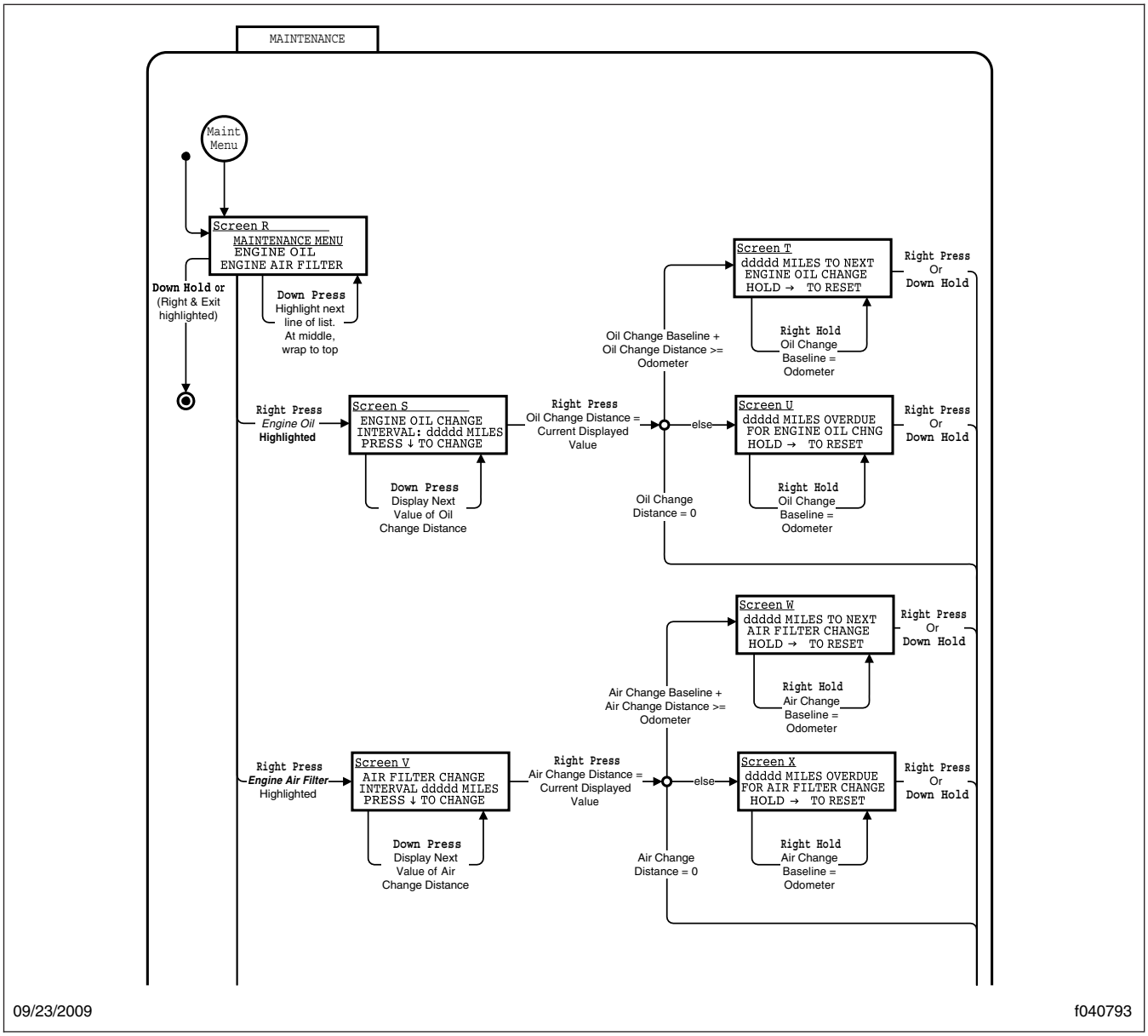

Fig. 2.10, Maintenance Menu Screens, Screen 1

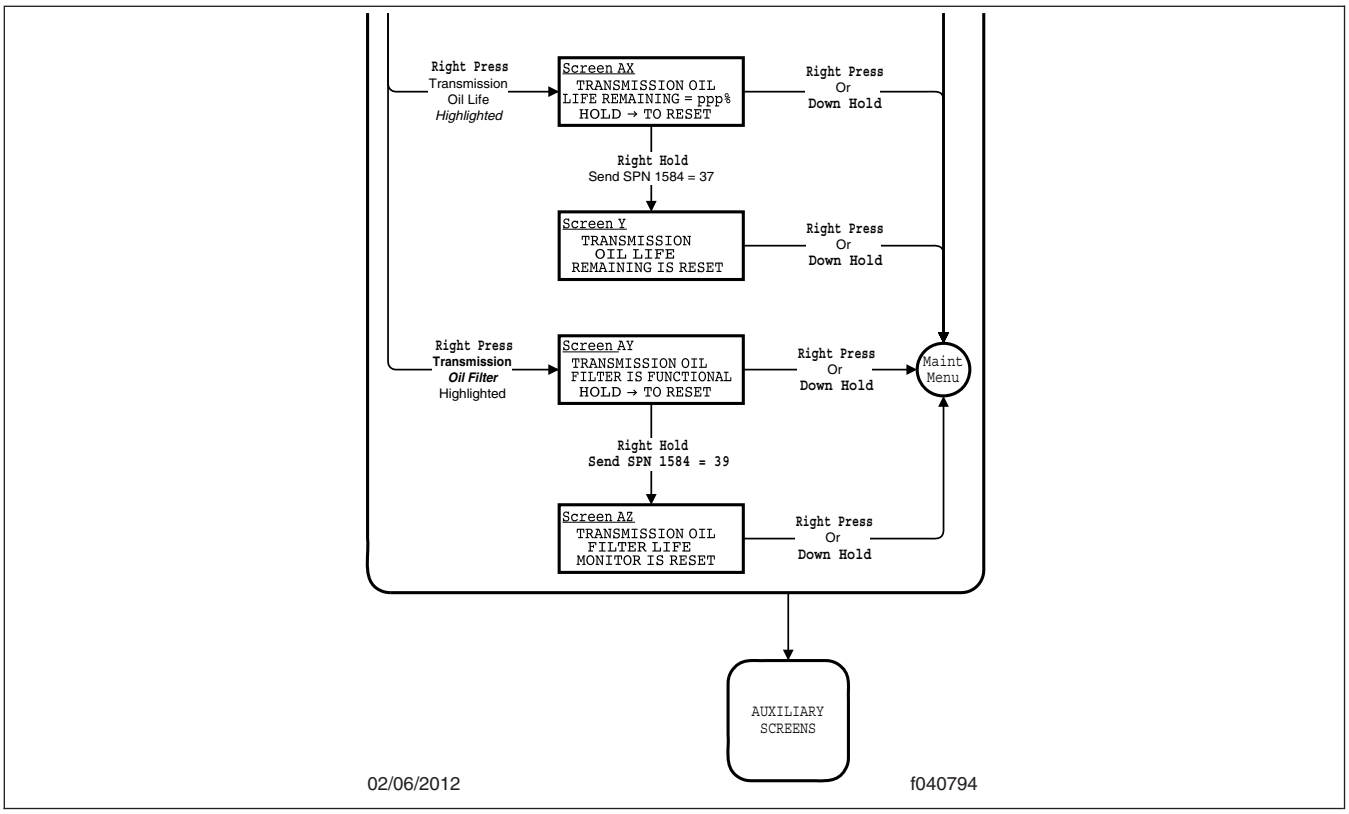

Fig. 2.11, Maintenance Menu Screens, Screen 2

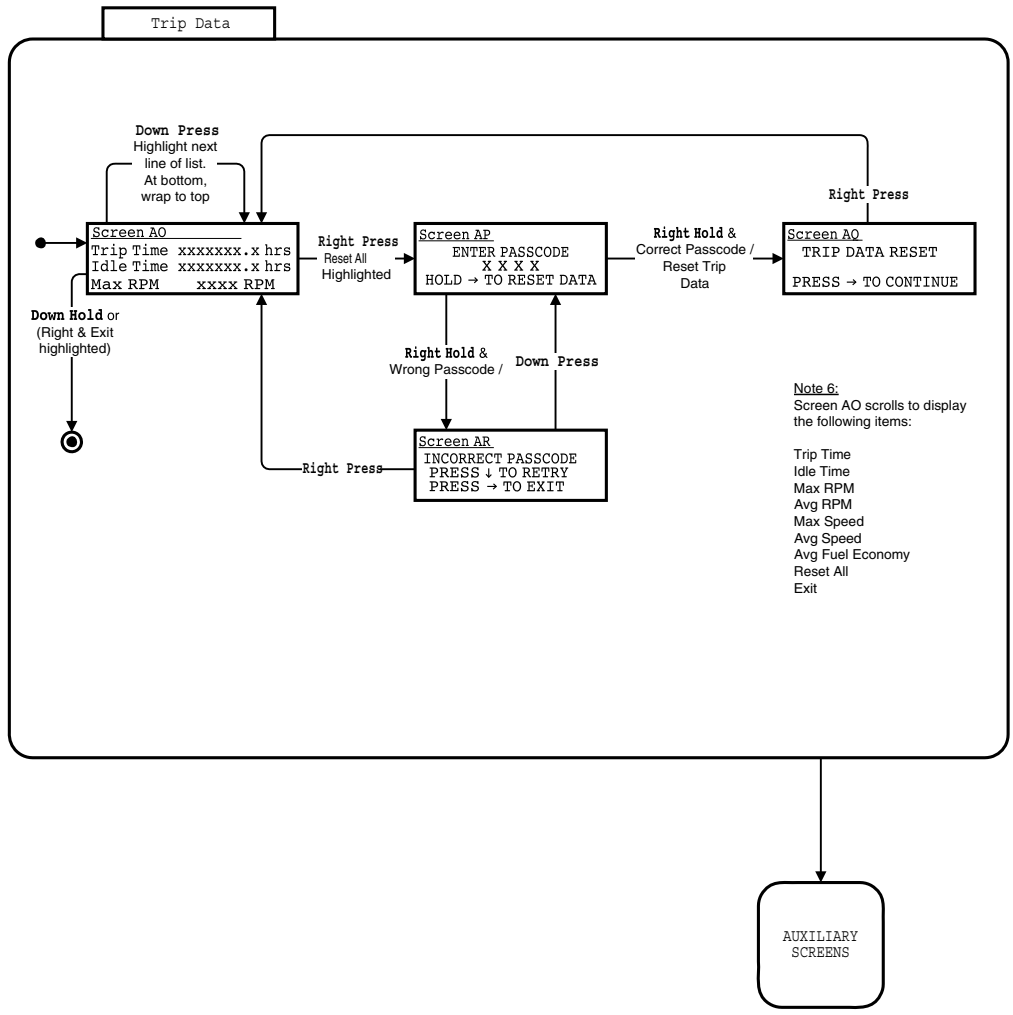

Fig. 2.12, Trip Data

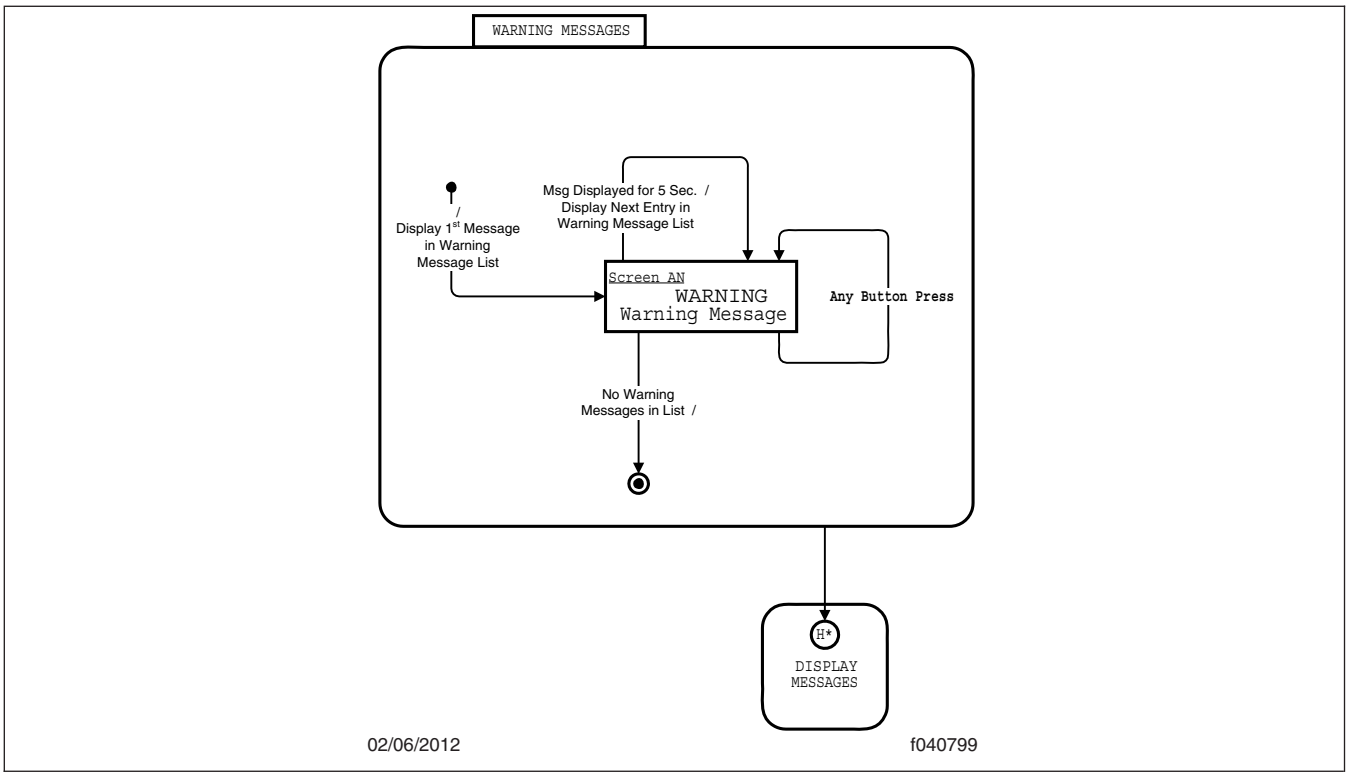

Fig. 2.13, Warning Messages

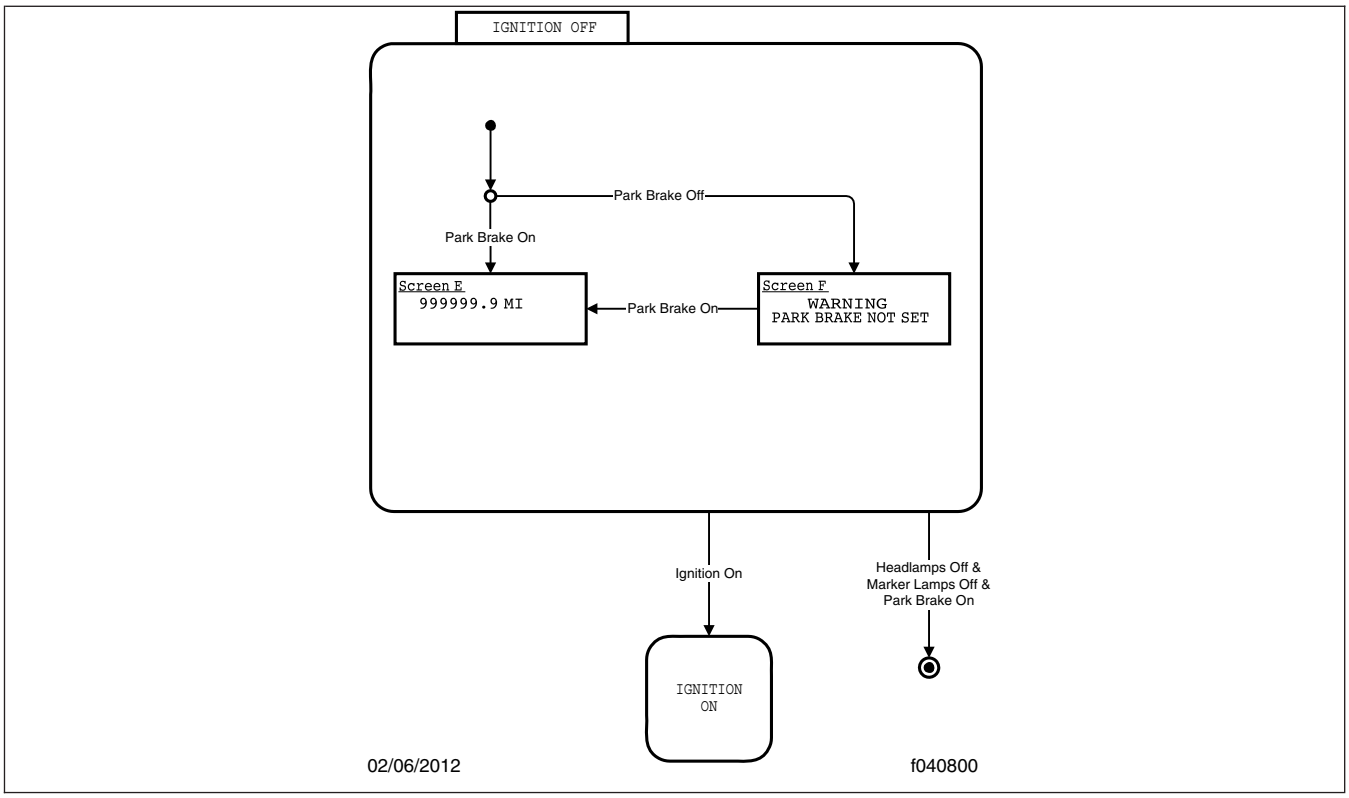

Fig. 2.14, Ignition Off (shown when ignition is keyed OFF)

3

OptiView Instrument Panel

OptiView™ Instrument Panel 3.1

OptiView™ Instrument Panel

The Walk-In Van OptiView instrument panel provides the driver with engine and vehicle information. It is comprised of electronic gauges, an audible alarm, a driver message center, and warning and indicator lamps (also known as telltales). Warning and indicator lamps illuminate in red (danger), amber (caution), green (status advisory), or blue (high-beam headlights active).

The OptiView instrument panel has tiles that can populate the left- and right-side of the display. Some vehicles are equipped with a 360-degree and backup camera video. For vehicles with this feature, the driver will see an alternate instrument panel layout.

See **Fig. 3.1** for a typical instrument panel and **Fig. 3.2** for the OptiView warning lamps. **Figure 3.3** shows how the instrument panel and warning lamps appear when the vehicle is in reverse gear.

Ignition Sequence

When the ignition is turned on, OptiView performs a self-test. Observing the ignition sequence is a good way to ensure the OptiView panel is functioning properly.

When the ignition is in the ON position, the following actions should occur:

- the antilock brake system, electronic stability control, and automatic traction control lamps illuminate for approximately three seconds, then are extinguished;
- seatbelt indicator lamp remains on for an additional five seconds after the other indicator lamps are extinguished;
- audible alarm sounds until the self-test is completed;
- if any faults are detected, an error message will display in the warning message area of the instrument panel.

When the self-test is complete, all warning lamps and indicators are extinguished.

Audible Alerts

An audible alert sounds during the ignition sequence until the self-test is completed, and whenever one of the following conditions exists:

- Air pressure falls below 65 psi (448 kPa).
- Anytime the low air warning lamp is activated. During start-up until air pressure in the tanks reaches approximately 70 to 76 psi (483 to 524 kPa).
- When the parking brake is engaged. The parking brake will not disengage until the air pressure has reached 65 psi (448 kPa).
- Emergency engine shutdown is activated.
- The parking brake is applied and the transmission is not in neutral.
- The transmission is in neutral or the ignition is in the OFF position, and the parking brake is not set and the service brake is not depressed.
- Anytime the ignition is turned OFF and the panel lamps are still illuminated.

Emergency Shutdown

The instrument panel will shut down if the voltage supply is not within the normal operating range of 9 to 16 volts for more than 10 milliseconds. During emergency shutdown, the gauges freeze, the display goes blank, and the lamps turn off. When power is restored to within the normal operating range following an emergency shutdown, a self-test is performed before resuming normal operation.

Gear Shift Position

The highlighted letter shown in the instrument panel indicates the gear shift position; P for park, R for reverse, N for neutral, and D for drive. See **Fig. 3.1**, item 9. If none of the positions are highlighted, a failure mode has occurred and could be due to a communication problem with the transmission.

Warning and Indicator Lamps

The instrument cluster has an emergency buzzer that sounds when serious conditions that require immediate attention occur.

A description of the standard warning and indicator lamps are listed below alphabetically.

ABS Warning

The ABS indicator illuminates when there is a malfunction in the vehicle antilock brake system (ABS).

NOTE: For more information about the ABS system, see **Chapter 9**.

⚠ WARNING

If the ABS warning light activates while driving, repair the system immediately to ensure full antilock brake capability. Operating the vehicle when the ABS needs to be serviced could cause an accident, possibly resulting in personal injury or death, or property damage.

Automatic Traction Control (ATC) Indicator

The ATC indicator illuminates during wheel spin and when the ATC system is active. When the system is active, it is set to deep snow/mud mode.

Battery Warning Lamp

The battery warning lamp notifies the driver that there is an issue with diagnostics.

Cruise Control

The cruise control indicator illuminates when the cruise control is activated.

Check Engine Warning

The check engine warning indicator illuminates when certain faults are detected. If a critical engine condition exists (for example, low oil pressure or high coolant temperature), the check engine indicator will illuminate to alert the driver to correct the condition as soon as possible. If the condition gets worse, the stop engine indicator will illuminate.

NOTE: If the check engine indicator illuminates during vehicle operation, take the vehicle directly to an authorized Freightliner service facility.

Electronic Stability Control (ESC) Indicator

The electronic stability control (ESC) indicator illuminates when the ESC system activates.

Fasten Seat Belt Warning

The fasten seat belts warning indicator illuminates for 5 seconds after the ignition switch is turned on.

Fog Lamp Indicator

The fog lamp indicator illuminates when the fog lamps are on.

Headlight/High-Beam Indicator

A green headlight indicator illuminates when the headlights are on.

The high-beam indicator (sideways beam icon) illuminates blue when the headlight high beams are on.

High Temperature Coolant Warning

The high coolant temperature indicator and emergency buzzer activate whenever the coolant temperature goes above a preset maximum specified by the engine manufacturer.

Hill Start Aid Indicator

The hill start aid indicator notifies the driver that the hill start aid system is not functioning correctly or is offline.

Lane Departure Warning

The lane departure warning activates when the vehicle is driven out of the current lane without a turn signal indicator active.

Left-Turn Indicator

The left-turn indicator flashes on and off when the left-turn signal lights are flashing.

Both turn indicators flash when the hazard warning flasher is turned on.

Low Air Pressure Warning

The low air pressure warning indicator and emergency buzzer activate when the engine is turned on if air pressure in the primary or secondary air reservoir is below 65 to 70 psi (448 to 483 kPa), and remain on until air pressure rises above that level in both reservoirs.

Low Diesel Exhaust Fluid (DEF) Warning

The low diesel exhaust fluid (DEF) warning indicator illuminates when the DEF tank is approximately 10% full. Fill the DEF tank as soon as possible to avoid engine derate (decreased engine power).

Low Fuel Indicator

The low fuel indicator illuminates when the fuel level is approximately 1/8 full.

Low Oil Pressure Warning

The low oil pressure warning indicator and emergency buzzer activate whenever the engine oil pressure goes below the preset minimum specified by the engine manufacturer.

Low Voltage Battery Warning

The low voltage battery warning indicator illuminates when the low voltage battery drops below 12 volts.

Low Windshield Washer Fluid Indicator

The low windshield washer fluid indicator illuminates when the washer fluid level is low.

Maintenance Warning Lamp

When the maintenance warning lamp illuminates, the message display center will alert the driver as follows:

- Oil Change Required—alerts the driver that the engine has reached the recommended oil change interval.
- Air Filter Reminder—the air filter requires checking or replacement.
- Transmission Prognostics Warning—if the transmission has prognostics enabled.

Malfunction Indicator Lamp (MIL)

The malfunction indicator lamp (MIL) indicates an engine emissions-related fault. See the engine operation manual for details.

Marker Light Indicator

The marker light indicator activates when the marker lights are on.

Parking Brake On Warning

The parking brake on indicator activates when the parking brake is engaged.

If the vehicle is moving at a speed of 2 mph (3 km/h) or more, the emergency buzzer will sound until the parking brake is released.

Right-Turn Indicator

The right-turn indicator flashes on and off when the right-turn signal lights are flashing.

Both turn indicators flash when the hazard warning flasher is turned on.

Shift Inhibit Indicator

The shift inhibit indicator illuminates when the gearbox ECU is prohibiting shifting.

Stop Engine Warning

The stop engine warning indicator illuminates if a malfunction that could cause engine damage occurs. In most cases, the engine protection warning will illuminate before the stop engine warning. When the stop engine warning indicator illuminates, immediately park the vehicle in a safe location and shut down the engine. Continued operation with the stop engine warning indicator illuminated will lead to automatic engine shutdown and possible engine damage.

Tire Pressure Monitoring System Indicator

The tire pressure monitoring system indicator illuminates when the system detects an issue with one or more tires such as under or over pressure or over temperature. A warning message also appears in the driver display screen.

Instrument Panel Screens

The following information describes different screens for features that may appear on the OptiView instrument panel while driving the vehicle.

Reverse Gear Display

NOTE: The reverse gear display is an optional feature.

When the vehicle is in reverse, the instrument panel provides a 360-degree image on the left-side, a proximity sensor in the top center, and rear video on the right-side. See **Fig. 3.4**.

Fuel Indicator and DEF Screen

The percent of fuel is displayed in the bottom left of the instrument cluster along with a corresponding bar graph. See **Fig. 3.5**. The fuel indicator bar graph has two states which include normal (blue) and low (amber). See **Fig. 3.6**.

When the fuel indicator bar graph is at 12.5% or below, a 'Low Fuel' warning message appears in the upper left corner of the instrument panel, shown in **Fig. 3.7**.

Turn Signal Screen

Turn signal indicators are located on the left- and right-side of the speedometer. When a turn signal is activated, a corresponding side-camera view is displayed in the center of the speedometer, if the vehicle is equipped with a 360-degree camera system. See **Fig. 3.8**.

OnGuardALERT™ Forward Collision Warning System

When the OnGuardALERT forward collision warning system (FCW) detects a possible imminent forward collision, an audible alert sounds. A red outlined vehicle and the distance to the vehicle appear under the speedometer, as shown in **Fig. 3.10**, ref. A. If the OnGuardALERT (FCW) becomes unavailable, an amber indicator illuminates in the center of the screen. See **Fig. 3.10**, ref. B. For further information, see the OnGuardALERT Forward Collision Warning System.

Left- and Right-Side Tiles

The driver can access the left- and right-side tiles by pressing the 'home' button on the steering wheel. See **Fig. 3.9**. The first press activates the left side tile and each additional press changes the active side from left to right. See **Fig. 3.11**.

Identical tiles are located on the left and right sides of the instrument panel, allowing for customization by the driver. See **Fig. 3.12**. The right side has an additional 'Settings' tile to access the settings menu. The available tiles are:

- Blank (if the driver does not want a tile to appear)
- Tachometer
- Transmission Temperature
- Oil and Coolant
- Fuel and DEF
- Fuel Economy
- Tire Pressure Monitoring System
- Trip 1
- Trip 2
- Settings (right-side tile only)

Pressing the 'up' or 'down' arrows on the steering wheel navigates through the tiles on the active side. Pressing OK on the steering wheel to confirm the tile selection, or five seconds of inactivity, deactivates the active tile and the currently displayed tiles will be shown in the instrument panel. The active tile is indicated with a square container around the tile and may contain messaging if the tile has resettable information or is the 'Settings' tile. See **Fig. 3.13**.

The Trip 1 and Trip 2 tiles contain information that can be reset by holding the OK button on the steering wheel for three seconds when the tile is active. This action is displayed to the user with a circular confirmation ring that fills clockwise around the OK button graphic at the bottom of the active tile as shown in **Fig. 3.14**.

Settings Tile

The settings tile allows the driver to access the settings menu by holding the OK button on the steering wheel for three seconds when the tile is active. This action is displayed to the user with a circular confirmation ring that fills clockwise around the OK button graphic at the bottom of the active tile. See **Fig. 3.14** for an example. After confirmation, the settings menu appears in the bottom center of the screen, as shown in **Fig. 3.15**. The driver uses the 'up' and 'down' arrows on the steering wheel to select the standard or metric speedometer, or diagnostics.

NOTE: The diagnostics menu is only used by technicians to setup, troubleshoot, or diagnose systems on the vehicle. It contains information such as fault codes, statuses of inputs and outputs to the instrument panel, and 360-degree camera calibration.

The driver can select 'Exit Menu' or hold the 'home' button on the steering wheel for three seconds to close the settings menu and return to the active settings tile on the right side of the instrument panel.

Warning Messages

When a system fault is detected, a warning message appears in the upper left corner of the screen. See **Fig. 3.16**. There are two types of warnings, an amber warning, and a red warning for critical conditions. Depending on the type of warning, the driver may be able to press the OK button on the steering wheel to dismiss it. If the warning is critical, the driver may not be able to dismiss it.

Warning Message with the Vehicle in Reverse

When the vehicle is in reverse gear and is equipped with a 360-degree camera system, any active warning messages appear in the center of the instrument panel. For an example, see **Fig. 3.17**.

Tire Pressure Warning

When low or high tire pressure or temperature is detected, the left side tile transitions to tire pressure and a warning message appears in the upper-left corner. See **Fig. 3.18**. When the OK button on the steering wheel is pressed, the warning message disappears and the left tile transitions back to the previously selected tile. The tire pressure monitoring system indicator remains active until the condition is no longer present.

OnGuardALERT™ Forward Collision Warning System

The following information is for the OnGuardALERT radar-based active safety system that offers forward collision warning (FCW) and braking integration.

OnGuardALERT detects objects ahead and measures the vehicle's position and speed in relation to other vehicles on the road to warn the driver of a possible collision by providing audible, visual and haptic warnings.

The system will provide a haptic brake pulse and begin to apply the brakes to reduce the severity of rearend collisions.

IMPORTANT: OnGuardALERT is not intended to replace driver control of the vehicle at any time. The driver must remain in control of the vehicle and determine the actions that are necessary for safe operation.

Safe Vehicle Operation

Multiple factors can affect set following intervals and create additional driving considerations. When operating a vehicle with the OnGuardALERT FCW with brake integration, it is important to remember:

- OnGuardALERT should only be considered as an aid and is not intended to replace driver control over the vehicle at any time.
- When operating the vehicle, always use safe driving techniques. The driver is always the most important element in safe vehicle operation.
- OnGuardALERT is only intended to assist reaction and response time. OnGuardALERT is not a substitute for proper driver braking and should only be considered a driver assistance system.

Unintended Events

The OnGuardALERT FCW is engineered to warn the driver of a potential collision threat so that the driver can react. Radar technology is not perfect; in every system it is possible that an unintended braking event may occur.

In the rare event that the driver experiences a false alert, or unintended braking event, they may experience the following sequence of events:

- Less than 0.4 seconds of braking.
- The vehicle brake lights will illuminate.
- The OnGuardALERT display screen will change to a collision warning (red).
- The OnGuardALERT display screen will change to a collision warning (red) and issue a short audible warning.
- The driver can reapply the throttle and continue driving the vehicle.

⚠ WARNING

OnGuard® is designed to create high vehicle deceleration (without driver intervention) in certain situations. To reduce the risk of injuries caused during OnGuard-activated vehicle deceleration, all vehicle occupants should be correctly seated with seat belt(s) buckled during vehicle operation. All loose items should be secured so that they will not fly forward and cause injury during a deceleration event. The use of OnGuard in vehicles not equipped with seat belts may expose non-belted passengers to injuries due to system initiated sudden vehicle deceleration, despite vehicle compliance with applicable safety standards.

System Limitations

The OnGuardALERT FCW brakes for moving and stationary objects located directly in front of the vehicle and does not operate when your speed is less than 15 mph (24 km/h) or over 77 mph (124 km/h). Accordingly, OnGuardALERT:

- Will not react and alert the driver to objects crossing in front of the vehicle or oncoming traffic.
- Should not be relied on to track lead vehicles when traveling through a severe curve or winding road.
- Should not be relied upon to track smaller objects (motorcycles, mopeds, bicycles, pedestrians, etc.)
- Should not be relied on to alert drivers to vehicles in an adjacent lane.

IMPORTANT: Drivers should take into account the road conditions, and any other factors they are encountering, as they choose how to react to any alerts they receive from the OnGuardALERT system.

OnGuardALERT FCW with brake integration is installed on vehicles with SmartTrac® Hydraulic Antilock Braking System. The system has significantly reduced performance in braking capabilities as compared to OnGuardACTIVE collision mitigation system installed on vehicles with pneumatic anti-lock braking systems.

Forward Collision Warning

The OnGuardALERT FCW system assists the driver in recognizing and responding to dangerous driving scenarios that could lead to a rear-end collision. The system responds by sending warnings, automatically reducing engine torque and providing some brake assistance through its integration.

OnGuardALERT's FCW provides both visual and audible alerts through an in-cab dash display. If a potential collision is developing and the driver does not take action to decelerate the vehicle, OnGuardALERT's brake integration feature issues a haptic warning (short brake pulse) and automatically dethrottles the engine. When OnGuardALERT begins brake integration, the brake lights will activate.

IMPORTANT: The brake application is intended to assist the driver to avoid or reduce the severity of a rear-end collision. The driver must take the appropriate corrective action in response to the collision warning. OnGuardALERT warnings will not be issued below a vehicle speed of 15 mph (24 km/h).

Operating Modes

Standard Driving Conditions

The OnGuardALERT FCW system will give audible and visual warnings when it detects a possible rear-end collision. FCW is active depending on settings from the manufacturer and will apply brakes if deemed necessary.

Collision Warning and Brake Integration

When an unforeseen event occurs, such as another vehicle entering the travel lane slower than you are, or the gap between you and a moving vehicle in front of you becomes too close, OnGuardALERT will provide an audible alert and the display will show a red outlined vehicle as shown in **Fig. 3.10**, ref. A.

If the system determines that a rear-end collision is imminent, it will automatically apply the brakes to reduce the vehicle's speed. The driver may also feel a short brake pulse to warn them of a collision. The driver must also take the appropriate corrective action to avoid dangerous driving situations.

If OnGuardALERT detects a stationary object (such as a disabled car) it will provide an audible alert, followed by a haptic alert and then reducing engine torque and providing some brake assistance. FCW will not be active when vehicle speed is below 15 mph (24 km/h).

System Errors

If the driver receives an OnGuardALERT system error notification, the display will show a yellow icon indicating an error. See **Fig. 3.10**, ref. B. While your vehicle will still be operable, certain OnGuardALERT functions may not be available.

It is recommended that the driver find a safe place to park and turn off the ignition for approximately three minutes. While stopped, inspect the radar and clear any blockage. This will reboot the systems and may correct the error. If the condition persists, the driver should contact their local Freightliner dealer to review the issue. Any error information should be recorded for troubleshooting purposes.

OptiView Instrument Panel



01/05/2022 f611967

1. Fuel Indicator
2. Primary Air Pressure Gauge
3. Left Tile
4. Warning Message
5. Speedometer
6. Right Tile
7. Secondary Air Pressure Gauge
8. Low Battery Voltage Warning
9. Gear Shift Position Indicator
10. Odometer

Fig. 3.1, Typical Instrument Panel



01/05/2022 f611975

1. Low Fuel Indicator
2. Low Diesel Exhaust Fluid (DEF) Warning
3. Low Primary Air Pressure Warning
4. Left-Turn Indicator
5. High Coolant Temperature Warning
6. Fasten Seat Belt Warning
7. Cruise Control
8. Low Oil Pressure Warning
9. Parking Brake On Warning
10. Air/Hydraulic Brake Warning (depending on vehicle type)
11. Automatic Traction Control Indicator
12. Tire Pressure Monitoring System Indicator
13. ABS Warning
14. Maintenance Indicator
15. Electronic Stability Control (ESC) Indicator
16. Wait To Start Indicator
17. Low Windshield Washer Fluid Indicator
18. Headlight/High-Beam Indicator
19. Right-Turn Indicator
20. Hill Start Aid Indicator
21. Malfunction Indicator Lamp (MIL)
22. Engine Warning/Engine Failure Indicator
23. Stop Engine Warning
24. Low Coolant Warning
25. Adaptive Cruise Control Failure Indicator (not used)
26. Fog Lamp Indicator
27. Marker Light Indicator
28. Low Voltage Battery Warning
29. Low Secondary Air Pressure Warning
30. Transmission Warning
31. Transmission Overheat Warning
32. Shift Inhibit Indicator
33. Lane Departure Warning (not used)
34. Forward Collision System Indicator (not used)

Fig. 3.2, Warning Lamps



01/05/2022 f611969

Fig. 3.3, Instrument Panel and Warning Lamps, Vehicle in Reverse Gear with a 360-Degree Camera System

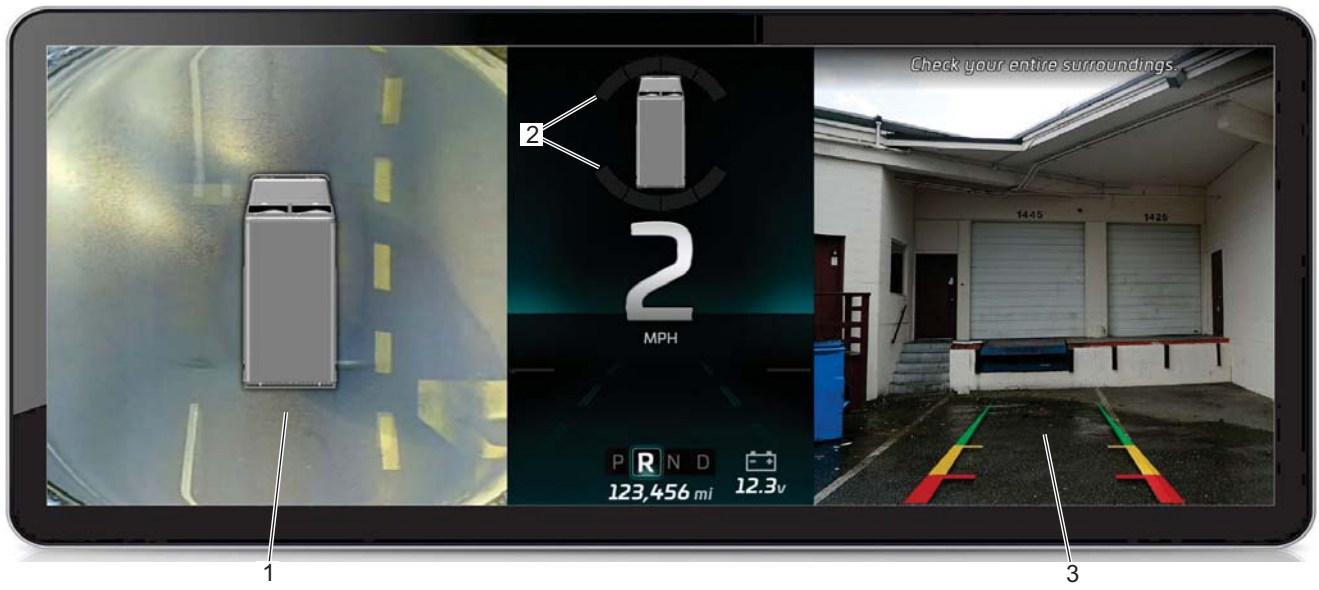

01/05/2022 f611968

1. 360-Degree Image
2. Proximity Sensor
3. Rear Video

Fig. 3.4, Reverse Gear Display Screen (warning lamps not shown for clarity)

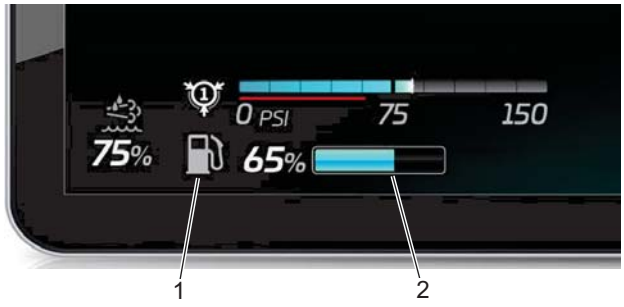

01/05/2022 f611954

1. Fuel Indicator
2 Fuel Bar Graph

Fig. 3.5, Fuel Indicator and Bar Graph

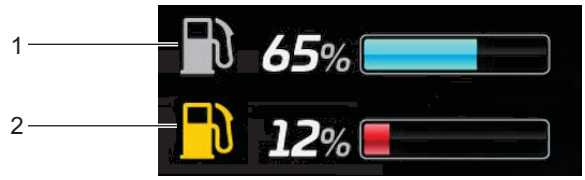

06/09/2021 f611934

1. Normal Fuel (blue bar)
2 Low Fuel (red bar)

Fig. 3.6, Fuel Bar Graph



11/05/2021 f611976

A. When the fuel is at 12.5% or below, a 'Low Fuel' warning message appears in the upper left corner of the instrument panel.

Fig. 3.7, Low Fuel Warning



10/28/2021 f611960

A. When a turn signal is activated and the vehicle is equipped with a 360-degree camera system, a side-camera view is displayed in the center of the speedometer.
1. Turn Signal Indicator

Fig. 3.8, Turn Signal Screen

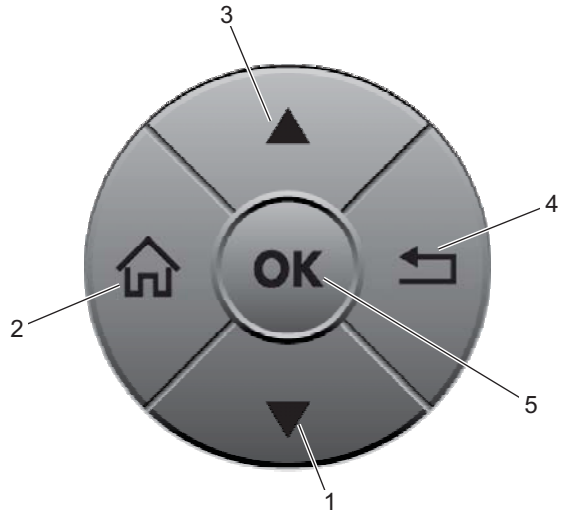

02/11/2021 f611923

1. Down Arrow
2. Home Button
3. Up Arrow
4. Back Button
5. OK Button

Fig. 3.9, Steering Wheel Buttons



10/28/2021 f611959

A. When the OnGuardALERT (FCW) system detects a possible forward collision, the forward vehicle is outlined in red and the distance to the vehicle is shown to the right.
B. The (FCW) system indicator illuminates when the system is not available.

Fig. 3.10, OnGuardALERT Forward Collision Warning System Screen



01/05/2022 f611971

A. The left-side tiles are active and noted by the blue square. The first tile is blank on both sides.

Fig. 3.11, Left-Side Tiles are Active



01/05/2022 f611972

A. Tachometer tile is selected for the left side.
B. Oil pressure and Coolant Temperature monitoring is selected for the right side.

Fig. 3.12, Tiles Selected for the Left and Right Side.



01/05/2022 f611962

A. The left-side tile is active and indicated by a square container around the tile.

Fig. 3.13, Active Tile, Left Side



02/11/2021 f611911

A. Hold the 'OK' button for three seconds to reset the Trip 1 an Trip 2 tiles. As the reset takes place, a circle fills clockwise around the 'OK' button below the active tile.

Fig. 3.14, Confirmation to Reset Active Tile Data

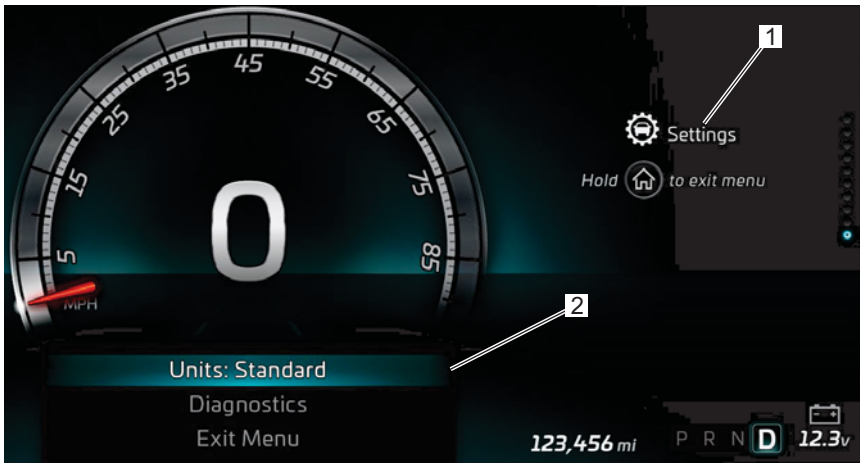

10/28/2021 f611963

1. Settings Tile
2. Settings Menu

Fig. 3.15, Settings Menu Screen



10/28/2021 f611965

A. Warning messages appear in the upper-left portion of the instrument panel.
B. A red critical warning message is shown in this location as an example only and would normally appear in the upper-left portion of the instrument panel.

Fig. 3.16, Warning Message Screen

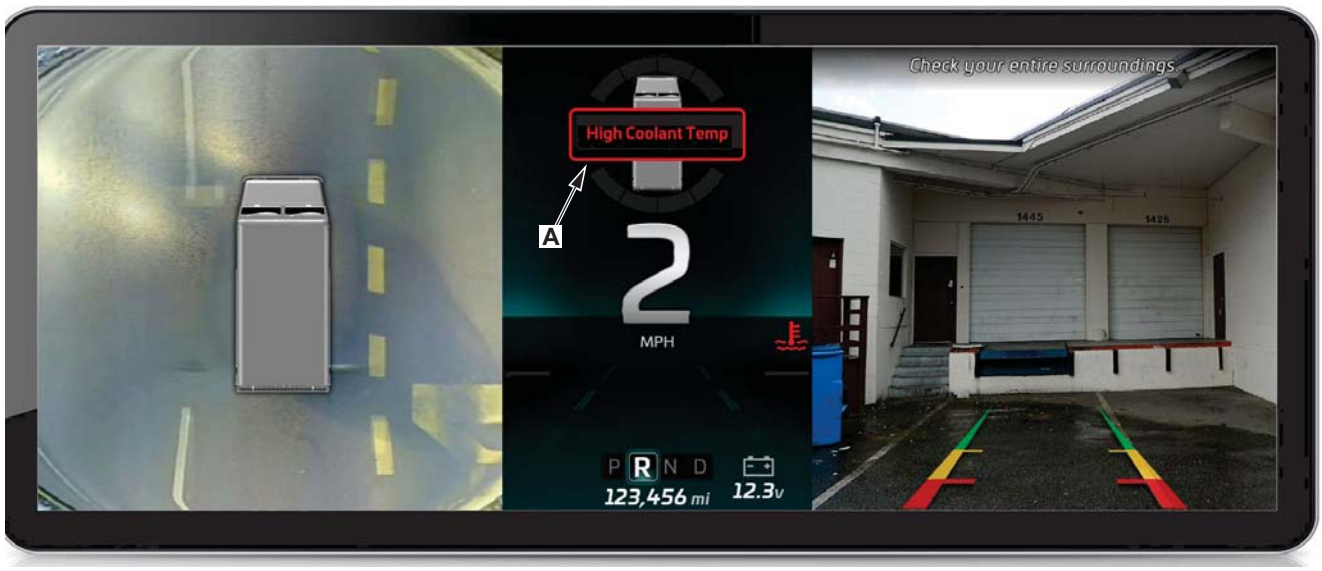

01/05/2022 f611966

A. When the vehicle is in reverse gear, active warning messages appear in the top-center of the instrument panel.

Fig. 3.17, Warning Message, Vehicle in Reverse Gear with a 360-Degree Camera System



10/28/2021 f611964

A. The tire pressure tile appears on the left side of the instrument panel to notify the driver when an issue occurs with one or more tires. In this example, the tire in amber has low pressure.
B. A warning message appears in the upper-left portion of the instrument panel.
1. Tire Pressure Monitoring System Indicator

Fig. 3.18, Tire Pressure Screen

4

Instruments

Warning and Indicator Lamps 4.1
Speedometer and Tachometer 4.4
Gauges 4.4
Optional Instruments 4.6

Warning and Indicator Lamps

The following information describes the various warning and indicator lamps found in the Ametek and OptiView™ instrument panels. See **Fig. 4.1** for an example of the Ametek warning and indicator lamps and **Fig. 4.2** for an example of the OptiView warning and indicator lamps.

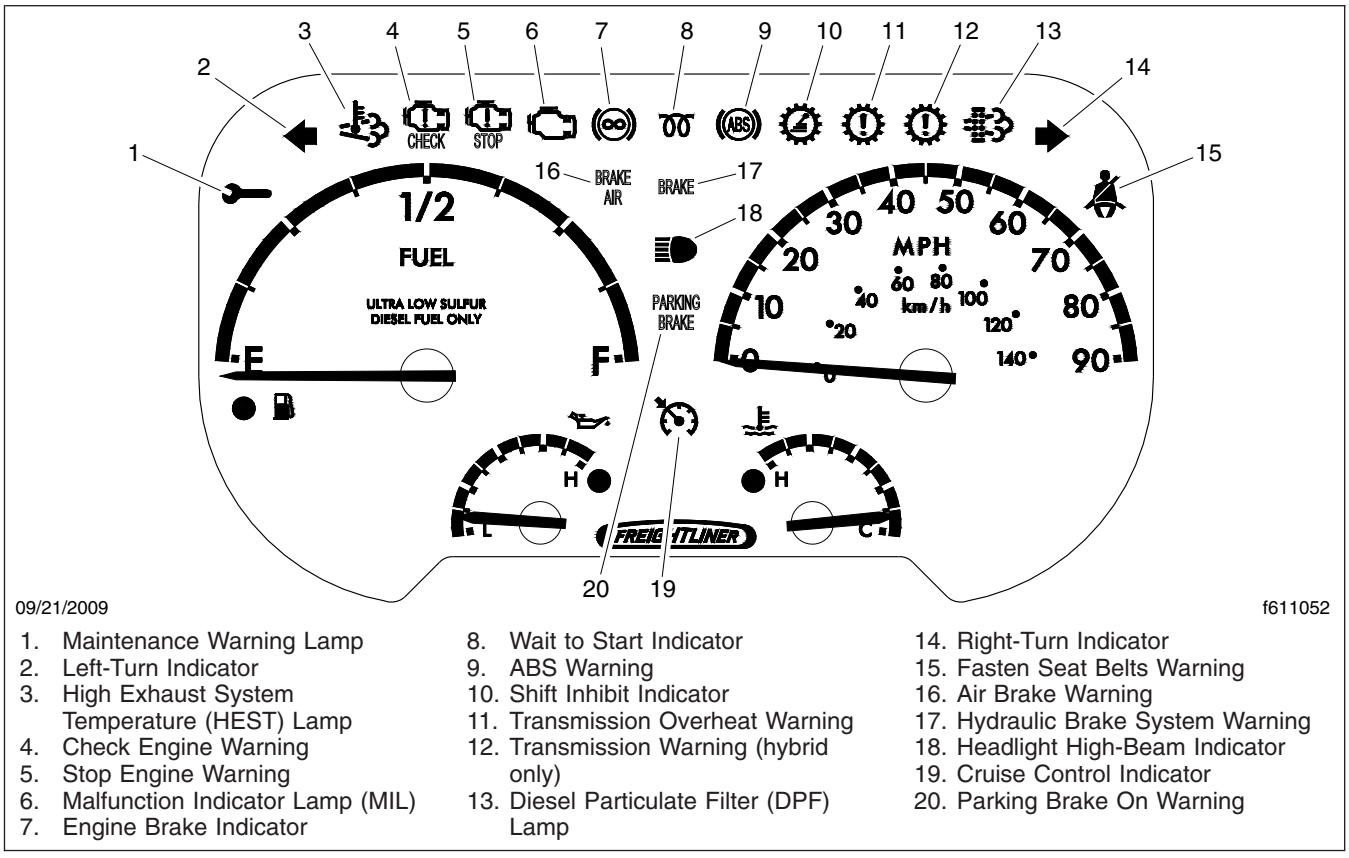

1. Maintenance Warning Lamp
2. Left-Turn Indicator
3. High Exhaust System Temperature (HEST) Lamp
4. Check Engine Warning
5. Stop Engine Warning
6. Malfunction Indicator Lamp (MIL)
7. Engine Brake Indicator
8. Wait to Start Indicator
9. ABS Warning
10. Shift Inhibit Indicator
11. Transmission Overheat Warning
12. Transmission Warning (hybrid only)
13. Diesel Particulate Filter (DPF) Lamp
14. Right-Turn Indicator
15. Fasten Seat Belts Warning
16. Air Brake Warning
17. Hydraulic Brake System Warning
18. Headlight High-Beam Indicator
19. Cruise Control Indicator
20. Parking Brake On Warning

Fig. 4.1, Ametek Warning and Indicator Lamps

The instrument cluster has an emergency buzzer that sounds when serious conditions that require immediate attention occur.

A description of the standard warning and indicator lamps are listed below.

NOTE: The following descriptions apply to each instrument panel where applicable and are listed alphabetically.

ABS Warning

The ABS indicator illuminates when there is a malfunction in the vehicle antilock brake system (ABS).

NOTE: For more information about this indicator and the ABS system, see **Chapter 9**.

⚠ WARNING

If the ABS warning lights come on while driving, repair the system immediately to ensure full antilock brake capability. Operating the vehicle when the ABS needs to be serviced could cause an accident, possibly resulting in personal injury or death, or property damage.

Air Brake Warning

The air brake warning lamp activates if the pneumatic brake system air is low, or if the air suspension is low.



1. Low Fuel Indicator
2. Low Diesel Exhaust Fluid (DEF) Warning
3. Low Primary Air Pressure Warning
4. Left-Turn Indicator
5. High Coolant Temperature Warning
6. Fasten Seat Belt Warning
7. Cruise Control/Adaptive Cruise Control Indicator
8. Low Oil Pressure Warning
9. Parking Brake On Warning
10. Air/Hydraulic Brake Warning (depending on vehicle type)
11. Automatic Traction Control Indicator
12. Tire Pressure Monitoring System Indicator
13. ABS Warning
14. Maintenance Indicator
15. Electronic Stability Control (ESC) Indicator
16. Wait To Start Indicator
17. Low Windshield Washer Fluid Indicator
18. Headlight/High-Beam Indicator
19. Right-Turn Indicator
20. Hill Start Aid Indicator
21. Malfunction Indicator Lamp (MIL)
22. Engine Warning/Engine Failure Indicator
23. Stop Engine Warning
24. Low Coolant Warning
25. Adaptive Cruise Control Failure Indicator
26. Fog Lamp Indicator
27. Marker Light Indicator
28. Low Voltage Battery Warning
29. Low Secondary Air Pressure Warning
30. Transmission Warning
31. Transmission Overheat Warning
32. Shift Inhibit Indicator
33. Lane Departure Warning (not used)
34. Forward Collision System Indicator

Fig. 4.2, OptiView Warning Lamps, EPA10 and Newer Engines

Check Engine Warning

The check engine warning indicator illuminates when certain faults are detected. If a critical engine condition exists (for example, low oil pressure or high coolant temperature), the check engine indicator will illuminate to alert the driver to correct the condition as soon as possible. If the condition gets worse, the stop engine indicator will illuminate.

NOTE: If the check engine indicator illuminates during vehicle operation, take the vehicle directly to an authorized Freightliner service facility.

Cruise Control Indicator

The cruise control indicator illuminates when the cruise control is activated.

Diesel Particulate Filter (DPF) Lamp

A solid illumination indicates a regeneration is required. Change to a more challenging duty cycle,

such as highway driving, to raise exhaust temperatures for at least 20 minutes, or perform a stationary regeneration. See the engine operator's manual for details.

A blinking lamp indicates that a stationary regeneration is required immediately. An engine derate and shutdown will occur. See the instructions in the engine operator's manual to perform a stationary regeneration.

Emergency Buzzer

The emergency buzzer sounds during the ignition sequence and whenever one of the following conditions exists:

- The engine oil pressure falls below the preset level which is 6 psi (41 kPa) at 700 rpm, or 18 psi (124 kPa) at 4400 rpm.
- The air pressure falls below the preset level, which is 65 psi (448 kPa).
- The parking brake is set with the vehicle moving at a speed greater than 2 mph (3 km/h).
- The coolant temperature rises above 253°F (123°C) and the check engine and stop engine lights illuminate. When the coolant temperature falls below 244° (118°C) the emergency buzzer and stop engine light will turn off.

NOTE: The check engine light will remain on until the vehicle is inspected at an authorized Freightliner service facility.

Engine Brake Indicator

The engine brake indicator illuminates when the engine brake is applied.

Fasten Seat Belt Warning

The fasten seat belts warning indicator illuminates for 30 seconds after the ignition switch is turned on.

Depending on the body builder, some vehicles may be equipped with an audible alarm in addition to the fasten seat belts warning indicator. For these vehicles, the alarm and indicator will remain active until the seat belt is fastened.

⚠ WARNING

If the vehicle is equipped with an air suspension system, do not move the vehicle with the air suspension deflated. Doing so could result in a loss of vehicle control, possibly causing personal injury and property damage.

Headlight High-Beam Indicator

The high-beam indicator (sideways beam icon) illuminates when the headlight high beams are on.

High Exhaust System Temperature (HEST) Lamp

The high exhaust system temperature (HEST) lamp alerts the operator of high exhaust temperature during the regen process when the speed is below 5 mph (8 km/h), or during a manual regen. The HEST lamp does not signify the need for any kind of vehicle or engine service; it only alerts the vehicle operator to high exhaust temperatures.

IMPORTANT: Make sure the engine exhaust pipe outlet is not directed at any person, or at any surface or material that will melt, burn, or explode.

Hydraulic Brake System Warning

The brake system warning lamp illuminates if there is a hydraulic brake system failure, or if the vehicle is powered and the engine is not running.

Left-Turn Indicator

The left-turn indicator flashes on and off when the left-turn signal lights are flashing.

Both turn signal indicators flash when the hazard warning flasher is turned on.

Maintenance Warning Lamp

When the maintenance warning lamp illuminates, the message display center will alert the driver as follows:

- Oil Change Required—alerts the driver that the engine has reached the recommended oil change interval.
- Air Filter Reminder—the air filter requires checking or replacement.
- Transmission Prognostics Warning—if the transmission has prognostics enabled.

Malfunction Indicator Lamp (MIL)

The malfunction indicator lamp (MIL) indicates an engine emissions-related fault. See the engine operation manual for details.

Parking Brake On Warning

The parking brake warning will flash for two minutes if the parking brake is not set when the ignition is turned off.

The warning also flashes if the vehicle is moving at a speed of 2 mph (3 km/h) or more. The emergency buzzer will sound until the parking brake is released and the driver display screen will show a PARK BRAKE SET message.

Right-Turn Indicator

The right-turn indicator flashes on and off when the right-turn signal lights are flashing.

Both turn indicators flash when the hazard warning flasher is turned on.

Shift Inhibit Indicator

The shift inhibit indicator illuminates when the transmission ECU is prohibiting shifting.

Stop Engine Warning

The stop engine warning indicator illuminates if a malfunction that could cause engine damage occurs. In most cases, the engine protection warning will illuminate before the stop engine warning. When the stop engine warning indicator illuminates, immediately park the vehicle in a safe location and shut down the engine. Continued operation with the stop engine warning indicator illuminated will lead to automatic engine shutdown and possible engine damage.

Transmission Overheat Warning

The transmission overheat indicator illuminates when the temperature of the transmission fluid goes above the preset level set by the transmission manufacturer.

For more information, see the transmission manufacturer's manual provided with the vehicle.

Wait to Start Indicator

The wait-to-start indicator lamp illuminates when the intake heater is active. Wait until the indicator light goes off to start the engine.

Speedometer and Tachometer

Speedometer

NOTE: The following gauges apply to the OptiView™ instrument panel. Gauges for the Ametek panel look slightly different, but function the same.

The speedometer indicates vehicle speed in miles per hour (mph) or kilometers per hour (km/h). See **Fig. 4.3**.



Fig. 4.3, Speedometer

Tachometer

The tachometer indicates the revolutions per minute (rpm) of the engine. See **Fig. 4.4**.

Gauges

Coolant Temperature Gauge

NOTICE

A sudden increase in coolant temperature may indicate engine or cooling system failure. Bring the vehicle to a safe stop and investigate the cause to prevent further damage. Do not operate the engine until the cause has been determined and corrected.

During normal engine operation, the coolant temperature gauge should read in the normal range between cold and hot. If the temperature remains below or exceeds the normal range, inspect the cooling system to determine the cause. See **Fig. 4.5**.



11/10/2021 f611978

1. Tachometer

Fig. 4.4, Tachometer

Oil Pressure Gauge

The oil pressure gauge should read in the normal range, from 2 to 80 psi (14 to 552 kPa). See **Fig. 4.5**.



11/10/2021 f611979

1. Oil Pressure Gauge
2. Coolant Temperature Gauge

Fig. 4.5, Oil Pressure and Coolant Temperature Gauges

NOTICE

A sudden decrease or absence of engine oil pressure may indicate mechanical failure. Bring the vehicle to a safe stop and investigate the cause to prevent further damage. Do not operate the engine until the cause has been determined and corrected.

Fuel Indicator and Bar Graph

The fuel indicator and bar graph indicates the amount of fuel in the fuel tank. See **Fig. 4.6**.

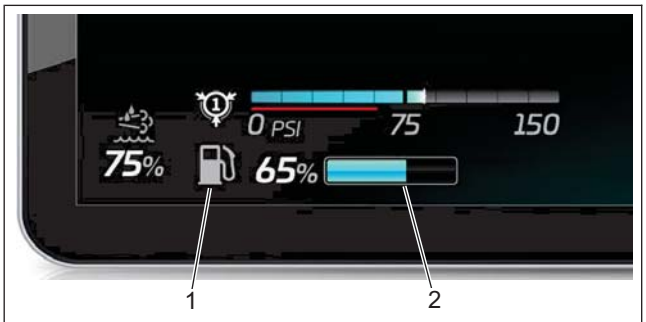

01/05/2022 f611954

1. Fuel Indicator
2. Fuel Level Gauge

Fig. 4.6, Fuel Level Gauge

Diesel Exhaust Fluid (DEF) Level Gauge

The DEF gauge indicates the amount of diesel exhaust fluid in the DEF tank. See **Fig. 4.7**.



06/09/2021 f611935

1. Normal Diesel Exhaust Fluid
2. Low Diesel Exhaust Fluid
3. Critical Diesel Exhaust Fluid

Fig. 4.7, Diesel Exhaust Fluid (DEF) Level Gauge

Primary and Secondary Air Pressure Gauges

⚠ WARNING

If air pressure falls below minimum pressure, the braking ability of the vehicle will be limited. Slow the vehicle down and bring it to a gradual stop. Do not attempt to move the vehicle until air pressure has risen above the minimum level. Moving a vehicle without adequate braking power could cause an accident resulting in property damage, personal injury, or death.

Air pressure gauges register the pressure in the primary and secondary air systems. See **Fig. 4.8**. Normal pressure with the engine running is 100 to 120 psi (690 to 827 kPa) in both systems.

Air pressure gauges are required on all vehicles with air brakes. A low-air-pressure warning lamp and buzzer, connected to both the primary and secondary systems, activate when air pressure in either system drops below a minimum pressure of 65 to 75 psi (448 to 517 kPa).

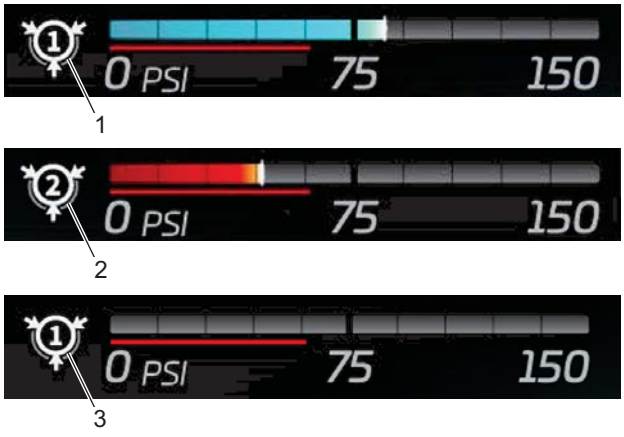

1. Primary Air Pressure Gauge
2. Secondary Air Pressure Gauge
3. Dead Air Pressure Gauge

Fig. 4.8, Primary and Secondary Air Pressure Gauges

Air Intake Restriction Gauge

An intake-air restriction indicator, mounted in the engine compartment, measures the vacuum on the engine side of the air cleaner at the air cleaner outlet. See **Fig. 4.9** and **Fig. 4.10**.

Air intake restriction vacuum is measured in inches of water (inH_2O). For vehicles equipped with a graduated indicator or a restriction gauge on the dash, check the gauge with the engine off. If restriction reaches 25 inH_2O, for Cummins diesel engines, or when the air restriction indicator is completely red for gasoline and Detroit™ diesel engines (if equipped with an air restriction indicator), replace the air cleaner element. Reset the indicator by pushing it down.

NOTE: Rain or snow can wet the filter and cause a temporarily higher than normal reading.

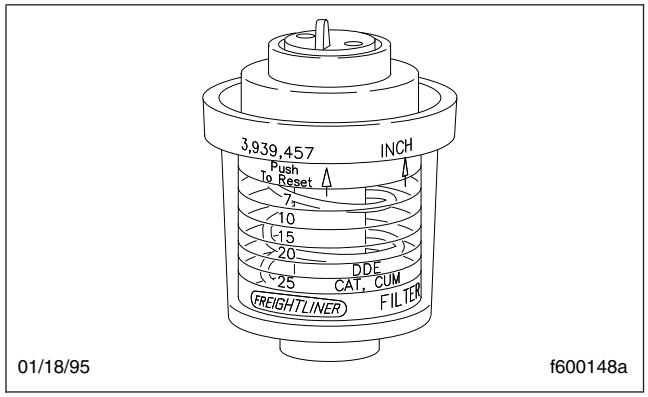

Fig. 4.9, Air Intake Restriction Gauge, Cummins Diesel Engines

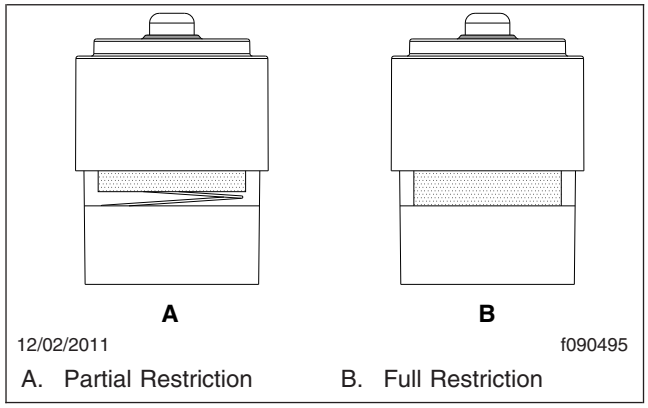

Fig. 4.10, Air Restriction Indicator, Gasoline and Detroit Diesel Engines

Optional Instruments

Single Air Pressure Gauge for Hydraulic Brakes with Air Provision

This option is only available with hydraulic brakes with air provision.

5

Controls

Ignition Switch and Key 5.1
Electrical System Controls 5.1
Lighting Controls 5.1
Windshield Wiper Controls 5.4
Cruise Control 5.4
Horn Controls 5.5
Powertrain Controls 5.5
Braking Control 5.7
Steering Control 5.8
Dash-Mounted Controls 5.8

Ignition Switch and Key

On most vehicles, the ignition switch can be turned to four positions: ACCESSORY, OFF, ON, and START. See **Fig. 5.1**. An optional three-position keyless ignition switch does not have the ACCESSORY position.

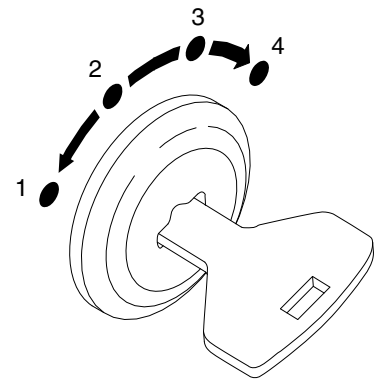

07/10/96 f601179

1. Accessory (optional)
2. Off
3. On
4. Start

Fig. 5.1, Ignition Switch Positions

The key can be inserted and removed only from the OFF position. The headlights (low beams), brake lights, fog lights, dome lights, clearance lights, turn signals, hazard warning lights, and the parking lights operate with the ignition switch in the OFF position, regardless of whether the key is inserted.

Turn the key fully clockwise to the START position, only when starting the engine. When the engine starts, release the key. When released, the key will rotate counterclockwise to the ON position.

In the ON position (key turned 45 degrees clockwise), all electrical systems are operable. The warning lights and the buzzer for low engine oil pressure operate until the engine is started and minimum engine oil pressure is achieved.

Electrical System Controls

The Walk-In Van chassis uses multiple electrical signals that are carried along a simplified set of wires, reducing the size of wiring bundles. There are significantly fewer wires overall, meaning less chance of damage, shorts, and other problems. The information in this chapter is to help familiarize the driver with the basic electrical system. Servicing the electrical system should be done only by qualified technicians. Special skills and equipment are required. Take the vehicle to an authorized Freightliner service facility for repairs.

Battery Disconnect Switch (optional)

Some Walk-In Van chassis may be equipped with a battery disconnect switch that can be used to prevent unwanted drain from the vehicle battery when the vehicle is not in use or is in storage. It can also rapidly disconnect from power supplies in the event of an emergency. Mounting locations may vary. See **Fig. 5.2**.

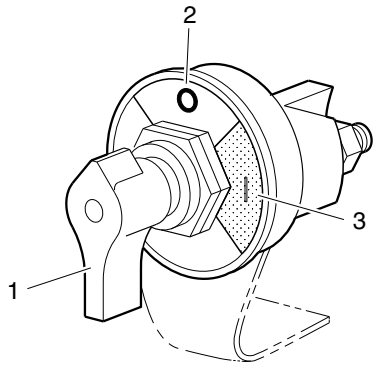

05/16/2007 f545041

1. Power-Off Position
2. Battery Disconnected (red area)
3. Power-On Position (green area)

Fig. 5.2, Battery Disconnect Switch (optional)

Lighting Controls

Automatic Ambient Headlight Sensor

IMPORTANT: This optional feature only activates or deactivates the panel lights, headlights and taillights; there is no high-beam headlight sensing function.

The ambient sensor activates the panel lights, headlights and taillights when the brightness of the ambient light drops below a preset value for three seconds. Once activated, these lights remain on and require either a headlight switch cycle (Off/On/Off), or turning the ignition to the OFF position to deactivate them.

Headlights

The headlight switch is a rotary switch located to the left of the steering column. See **Fig. 5.3**.



08/28/2018 f611525

Some vehicles may be equipped with a rocker switch to activate the fog lights. If so equipped, the rocker switch is installed by the body builder and the location will vary.

1. Fog Lights—Activate by pulling the switch out when the marker lights or headlights are on.
2. Automatic Headlights (optional)
3. Off
4. Marker Lights
5. Headlights

Fig. 5.3, Headlight Switch

The headlights automatically turn on if the windshield wipers are on. The headlights can be deactivated by:

- switching the windshield wipers off;
- cycle the headlight switch (Off/On/Off);
- turn the ignition to the OFF position.

High-Beam Headlights

NOTE: The ignition switch must be on for the high beams to work.

With the low-beam headlights on, push the turn-signal lever away from you to turn on the high-beam headlights. See **Fig. 5.4**. To turn off the high-beam headlights, pull the lever to the middle position.

With the low-beam headlights on, pull the lever towards you to flash the high-beam headlights momentarily.

When the high-beam headlights are on, a blue telltale illuminates on the instrument cluster.

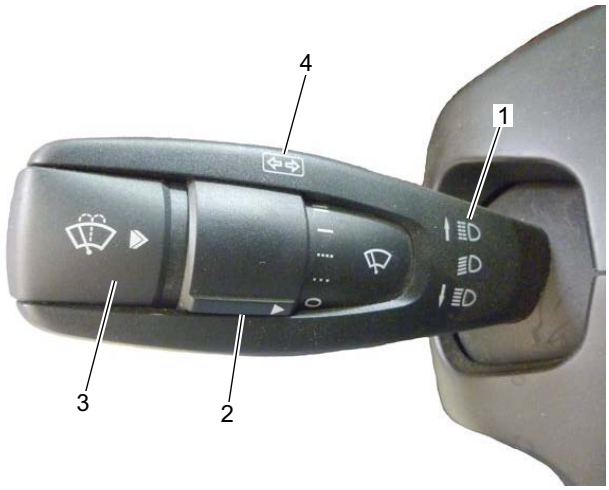

02/17/2017 f611264

1. Headlight Control Symbols
2. Windshield Wiper Switch
3. Windshield Washer Switch
4. Turn Signal Symbol

Fig. 5.4, Steering Column-Mounted Turn Signal Lever

Fog Lights

NOTE: Some vehicles may be equipped with a rocker switch to activate the fog lights. If so equipped, the rocker switch is installed by the body builder and the location will vary.

To activate the fog lights, do one of the following based on the vehicle controls:

- Pull the rotary switch out when the marker lights or headlights are on. See **Fig. 5.3**.
- Push the rocker switch (not shown).

Marker Lights

To turn the marker lights on, turn the headlight switch clockwise past the off position. See **Fig. 5.3**.

Marker Interrupt

The marker interrupt switch, located in the right-hand switch pod of the steering wheel, temporarily flashes the marker lights. See **Fig. 5.5**.

Turn Signals

The turn signal lever is mounted on the left-hand side of the steering column. Moving the turn signal lever down activates the left turn signal lights; moving it up activates the right turn signal lights. The



08/20/2018 f611524

1. Cruise Accelerate/Resume
2. Marker Interrupt
3. Cruise Decelerate/Set
4. Phone Hang-Up/Reject
5. Mute Button
6. Phone Pick-Up
7. Cruise On/Off
8. Cruise Cancel
9. Volume Increment Up
10. Back Button
11. Volume Increment Down
12. Down Arrow
13. Menu Cycle
14. Home Button
15. OK Button
16. Up Arrow

Fig. 5.5, Steering-Wheel-Mounted Switches

lever is a self-canceling combination turn signal, windshield wiper/washer switch, and high-beam headlight control unit. See **Fig. 5.4**.

When a turn signal is activated, a green indicator arrow flashes at the far left or far right of the instrument panel.

The lever automatically returns to the neutral position (self-cancels the switch) when the steering wheel returns to the straight-ahead position after a turn. To cancel the signal manually, move the lever to the neutral position.

Hazard Warning Lights

To activate the hazard warning lights, push the hazard warning light switch on the right side of the steering column. See **Fig. 5.6**. When the hazard warning lights are activated, all of the turn signal lights and both of the turn signal indicator lights on the instrument panel will flash.

To cancel the warning lights, push the switch in on the right side of the steering column.



02/27/2019 f462366a

1. Hazard Warning Light Switch

Fig. 5.6, Hazard Warning Light Switch

Windshield Wiper Controls

NOTICE

Do not attempt to manually move the windshield wiper arms. Wiper motor damage will occur if the arms are forcibly moved.

The windshield wipers and washer controls are on the multi-function turn signal lever on the left-hand side of the steering column. See **Fig. 5.4**.

The wipers are operated by a rotary switch on the turn signal lever. There are five settings, marked on the dial by symbols for off, two intermittent settings, and two continuous speeds.

Turn the wipers on by rotating the rotary switch up. Rotate the switch further to increase the speed of the wipers through the two intermittent settings, then to low and high speeds. Rotate the switch down to slow the wipers down. Rotate the switch as far down as it will go to turn the wipers off.

The windshield washer button is located at the end of the turn signal lever. Momentarily press the windshield washer button to initiate a single wipe without activating the washer pump. The wipers will swipe one full cycle and return to the inactive position.

To operate the windshield washers, press and hold the button in. After a short delay, the washer will pump windshield washer fluid onto the windshield for as long as the washer button is pressed. The windshield wipers will turn on at low speed while the washer button is pressed. After the button is released, the wipers will continue to operate for one to several wipe cycles, depending on how long the wash button was pressed initially.

Cruise Control

⚠ WARNING

Do not use the cruise control system when driving conditions do not permit maintaining a constant speed, such as in heavy traffic or on roads that are winding, icy, snow-covered, slippery, or roads with a loose driving surface. Failure to follow this precaution could cause a collision or loss of vehicle control, possibly resulting in personal injury or property damage.

NOTE: Maximum cruise control speed varies according to vehicle specifications, but cannot exceed 75 mph (121 km/h).

Cruise control allows the driver to automatically control the speed of the vehicle above 32 mph (51 km/h). The buttons that operate the cruise control system are located on the right-hand switch pod of the steering wheel. See **Fig. 5.5**.

- Cruise On/Off Button—Press to turn cruise control on or off. When cruise control is on, the ICU message center displays relevant cruise control icons and the set speed. The speed memory will be retained until the cruise control is disabled with the on/off button, or the ignition is turned off.
- Cruise Accelerate/RES Button—Press and hold to increase the set cruise speed. Press to resume the set speed.
- CNCL Button—Press to pause the cruise control, while retaining the speed setting in memory. The cruise control can also be disengaged, while retaining the speed memory, by depressing the brake pedal.
- Cruise Decelerate/SET Button—Press to set the cruise speed while the vehicle is traveling at the desired speed. Press and hold to decrease the set cruise speed.

1. To cruise at a particular speed:

   1.1 Press the on/off button to turn cruise control on.

   1.2 Depress the accelerator pedal until the speedometer reaches the desired speed.

   NOTE: Cruise control is cancelled if the brake pedal is depressed, or vehicle speed drops below the minimum cruise control speed.

   1.3 Press the cruise decelerate/SET button to set the desired speed.

NOTE: The speed memory is lost whenever the ignition switch is turned to OFF, or cruise control is turned off.

2. To disengage the cruise control, do one of the following:
   - Press the CNCL button in the center of the right-hand control pod.
   - Depress the brake pedal.

3. To resume a preselected cruise speed:
   3.1 Ensure cruise control is on.
   3.2 Press the cruise accelerate/RES button. Cruise will return to the last set speed.

   NOTE: If vehicle speed drops below the minimum cruise control speed, cruise control will disengage. To resume to the preselected cruise speed, increase vehicle speed to above minimum cruise control speed and press the cruise accelerate/RES button.
4. To increase cruise speed, press the cruise accelerate/RES button until the vehicle accelerates to the desired speed.
5. To decrease cruise speed, press the cruise decelerate/SET button until the vehicle decelerates to the desired speed.

Horn Controls

The button for the horn is located in the center of steering wheel. To sound the horn, press the center of the steering wheel pad.

Powertrain Controls

Allison Automatic Transmissions

Allison automatic transmissions are controlled by one of the following shift controls depending on what is installed in the vehicle. See **Fig. 5.7** and **Fig. 5.8**. For vehicles equipped with the automatic transmission multifunction control, shown in **Fig. 5.9**, the control moves in two directions and has two switches. It is used to request manual shifts, change shift mode, set engine brake levels, and control specialty engine brake functions. See **Chapter 7** for complete transmission operating instructions.

Manual Dump Valve

On vehicles equipped with an optional manual dump valve, there are two ways to deflate the rear suspension. With the key in the OFF position, toggle the dump valve into the "lower" position. If the key is in the ON position, the parking brake must be set (ON) before the dump valve is toggled into the "lower" position.

NOTE: If the key is turned to the ON position and the parking brake is not engaged, the override will cause reinflation of the air ride system.

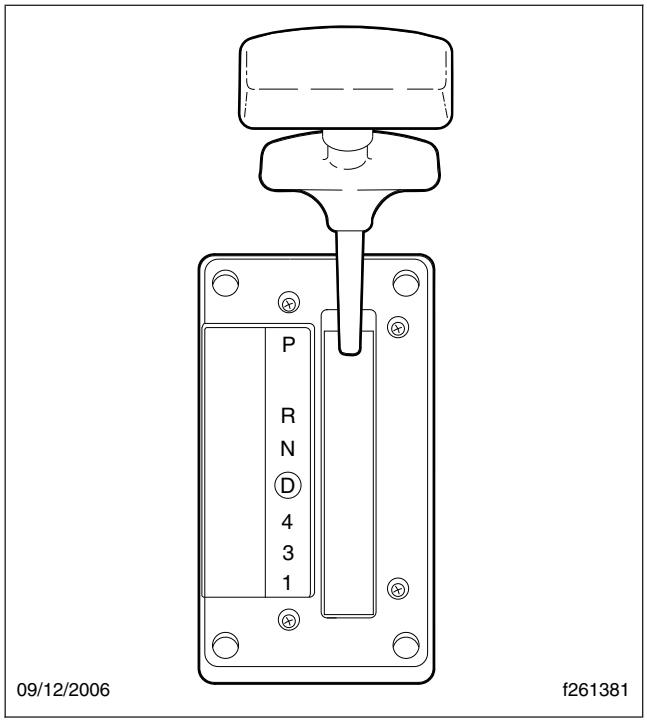

Fig. 5.7, T-Handle Shift Control (typical)

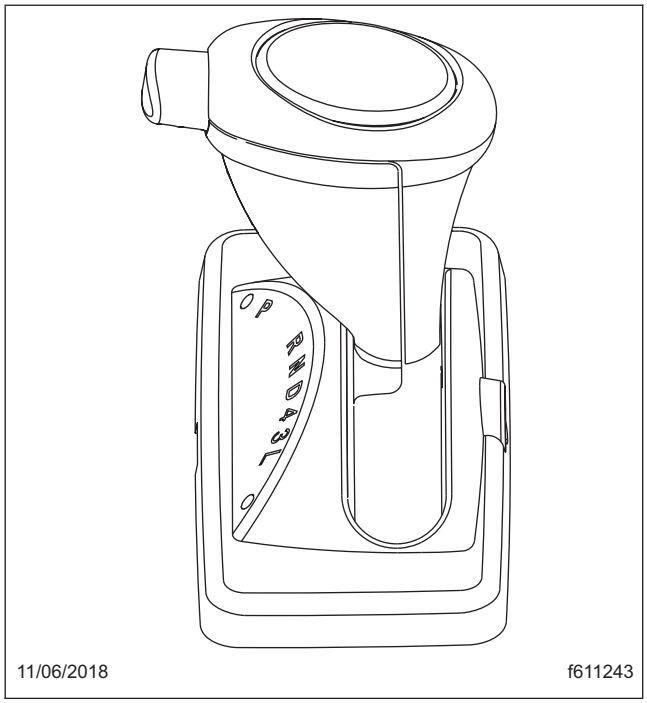

Fig. 5.8, T-Handle Shift Control (optional shifter)

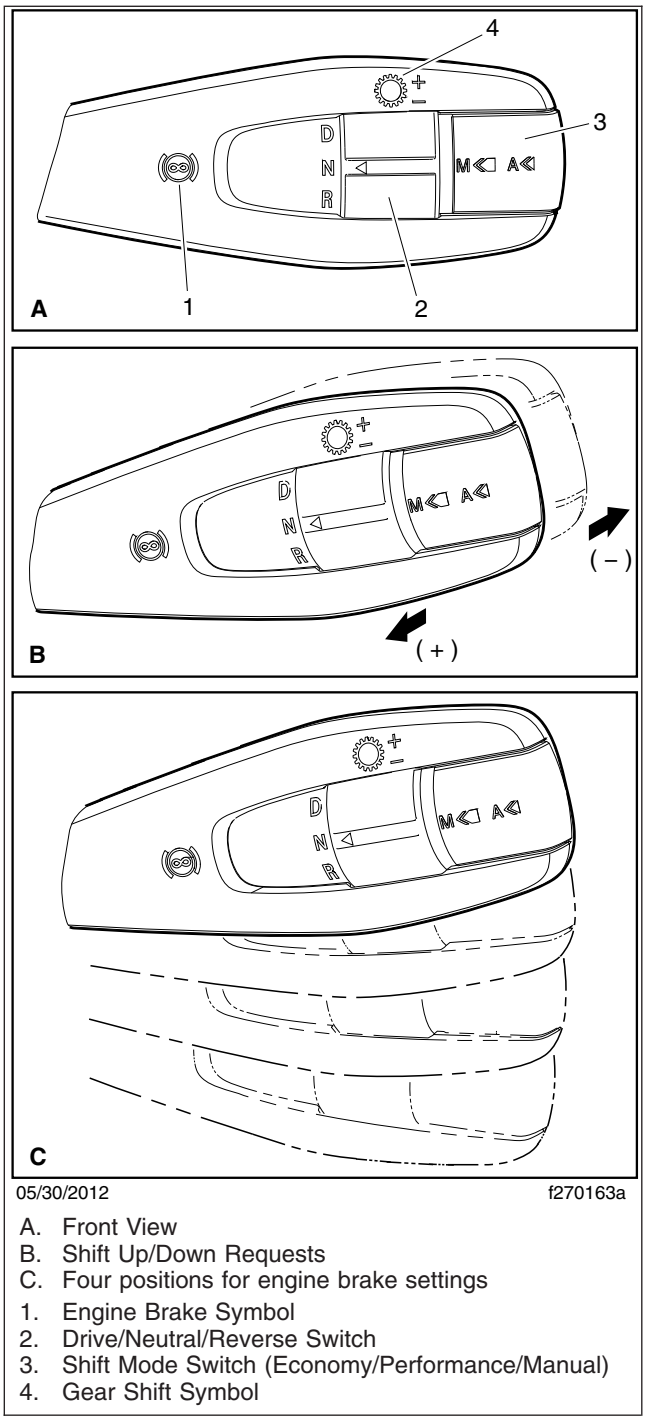

A. Front View
B. Shift Up/Down Requests
C. Four positions for engine brake settings
1. Engine Brake Symbol
2. Drive/Neutral/Reverse Switch
3. Shift Mode Switch (Economy/Performance/Manual)
4. Gear Shift Symbol

Fig. 5.9, Automatic Transmission Multifunction Control

Backup Alarm

An optional backup alarm, supplied with the chassis and installed by the body builder, sounds when reverse (R) gear is engaged. Check the operation of the backup alarm daily (if so equipped).

Engine Protection Shutdown Override Switch

The engine protection shutdown override switch resets the engine shutdown timer at 30 seconds. The stop engine lamp flashes 30 seconds before shutting the engine down. The operator can use the override switch as many times as desired or until engine failure. See **Fig. 5.10**.

NOTICE

Using the override button so the engine operates for an extended period may result in engine damage. The operator has the responsibility to take action to avoid engine damage.

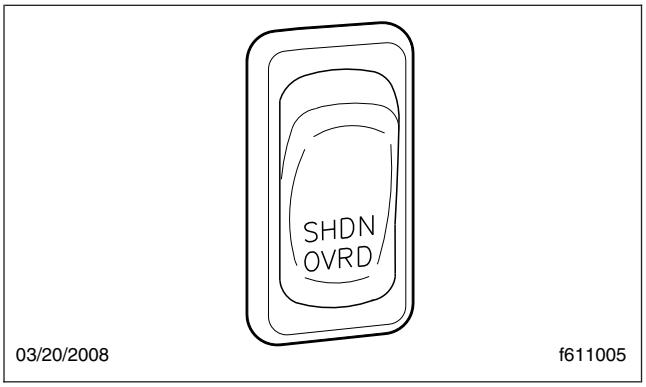

Fig. 5.10, Engine Protection Shutdown Override Switch

Engine Brake Switch

NOTE: See **Chapter 9** for detailed information about engine brake operation.

Whenever vehicle braking is required on good road conditions, the engine brake may be used in conjunction with the service brakes. There is no time limit for operation of the engine brake. However, an engine brake does not provide the precise control of, and is not a substitute for, service brakes.

The engine brake control is located on the right-hand steering-column-mounted lever. At the top position, the engine brake is off, and at the three lower positions, the brake is on and the intensity (low, medium, high) increases with each step down. See **Fig. 5.11**

IMPORTANT: On some vehicles, the engine brake only has off and high intensity options.

NOTE: The cruise control system and safety systems may activate the engine brake regardless of the lever position.

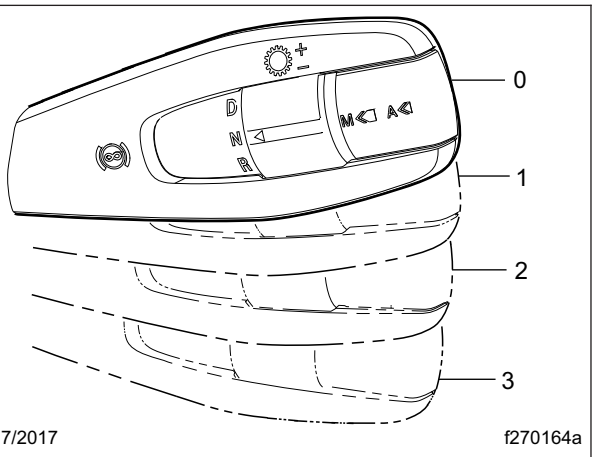

On some vehicles, the engine brake only has off and high intensity options.

0. Off
1. Low
2. Medium
3. High

Fig. 5.11, Engine Brake Positions

Braking Control

Parking Brake Control

Hand-Operated Parking Brake

On all vehicles, a parking brake control lever is located to the left of the steering column. To apply the parking brake, depress the brake pedal, then pull up on the parking brake lever. To release the parking brake, depress the brake pedal and push the parking brake lever all the way down.

IMPORTANT: Take care to hold on to the parking brake lever while releasing it. Do **NOT** allow the lever to slam down while releasing it.

NOTICE

Overtightening of the knob can lead to cable breakage and/or damage to the knob and lever.

If the parking brake does not hold the vehicle securely, depress the brake pedal and release the parking brake. Turn the knob on the end of the lever clockwise to increase the parking brake application.

If the parking brake still doesn't hold the vehicle securely (after adjustment), check the brake lining thickness. For instructions, see **Group 42**of the *Walk-In Van Chassis Maintenance Manual*.

Hydraulic Parking Brake (optional)

To apply the hydraulic parking brake, pull the yellow knob labeled PARKING BRAKE on the dash panel. See **Fig. 5.12**. In order to release the hydraulic parking brake, the engine must be running (hydraulic pressure is needed to release the brake) and the gear selector must be in the Neutral (N) position. To release the parking brake, push the knob in.



Fig. 5.12, Parking Brake Control Knob

CAUTION

On vehicles with hydraulic parking brakes, loss of all hydraulic pressure will cause the parking brake to automatically engage.

NOTE: If the gear selector is not in the Neutral (N) position and the parking brake is on, a buzzer will sound to let the driver know to place the gear selector in the Neutral (N) position.

If the ignition key is in the OFF position and the parking brake is not applied, a buzzer will sound to let you know that you should apply the parking brake.

With the engine shut down, the hydraulic pump will actuate with your foot on the brake pedal; this could cause the battery to run down. If the engine is inoperable, see the "Emergency Release of Parking Brake" procedure that follows.

Emergency Release of Parking Brake (automatic transmission)

If the engine will not start and you want to release the parking brake, do the following. Block the wheels and turn the ignition switch to the ON position.

NOTICE

Do not crank the engine for more than 30 seconds at a time during any of the following procedures. Wait two minutes after each try to allow the starter to cool. Failure to do so could cause starter damage.

Use the ignition switch to turn the engine over several times with the gear shift selector in the Neutral (N) position and the parking brake knob in the released (pushed) position.

NOTE: The emergency release will not work in all cases. The system requires hydraulic fluid to provide pressure for the procedure to work. Since the system is pressurized when the brake is released, the parking brake will come back on in 10 minutes, or longer depending on internal pressure.

Steering Control

Standard Tilt/Telescope Steering Column

WARNING

Never try to tilt or telescope the steering column while driving the vehicle. Doing so could cause loss of vehicle control and result in personal injury, or death, or property damage.

To tilt the steering column or telescope the steering wheel, press down on the foot pedal (located below the steering wheel) to release the steering column lock. Adjust the column and steering wheel to the desired position. Release the foot pedal to lock the steering column and steering wheel in place. See **Fig. 5.13**.

NOTE: For safety, the steering column is locked at all times unless the foot pedal is depressed.

Power Tilt/Telescope Steering Column and Adjustable Pedals

WARNING

Never try to tilt or telescope the steering column while driving the vehicle. Doing so could cause loss of vehicle control and result in personal injury, or death, or property damage.

Power tilt/telescope steering columns have a toggle switch on the left side of the steering column.

To tilt the steering column and telescope the steering wheel, rotate the toggle switch on the left-side of the steering column to the 'column' position. See **Fig. 5.13**. Push the toggle switch up or down to adjust the column to the desired height. Push the switch back toward the dash and the steering wheel goes in; pull the switch toward the driver and the steering wheel comes out. Once the column and steering wheel are at the desired position, rotate the toggle switch to the middle (off) position.

NOTE: Both the brake and throttle pedal position are adjusted at the same time.

Some steering columns are equipped with the toggle switch but it only adjusts the brake and throttle pedals. Use the foot pedal on these vehicles to tilt and telescope the steering wheel.

WARNING

Never try to adjust the brake or throttle pedal position while driving the vehicle. Doing so could cause loss of vehicle control and result in personal injury, or death, or property damage.

To adjust the position of the brake and throttle pedals, rotate the toggle switch on the left-side of the steering column to the 'pedals' position. See **Fig. 5.13**. Push the toggle switch toward the dash to move the pedals back or pull the toggle switch toward the driver to move the pedals forward. Once the pedals are at the desired position, rotate the toggle switch to the middle (off) position.

NOTE: For safety, the steering column and pedal toggle switch should be in the middle (off) position unless the vehicle transmission is in park (P).

Dash-Mounted Controls

Aftertreatment System (ATS) Regen Switch

The regen switch, located on the dash, is used to initiate a parked regen of the aftertreatment device. See **Fig. 5.14**. See **Chapter 6** for additional parked regen information.

NOTE: The DPF lamp must be illuminated before the regen switch will initiate a parked regen.

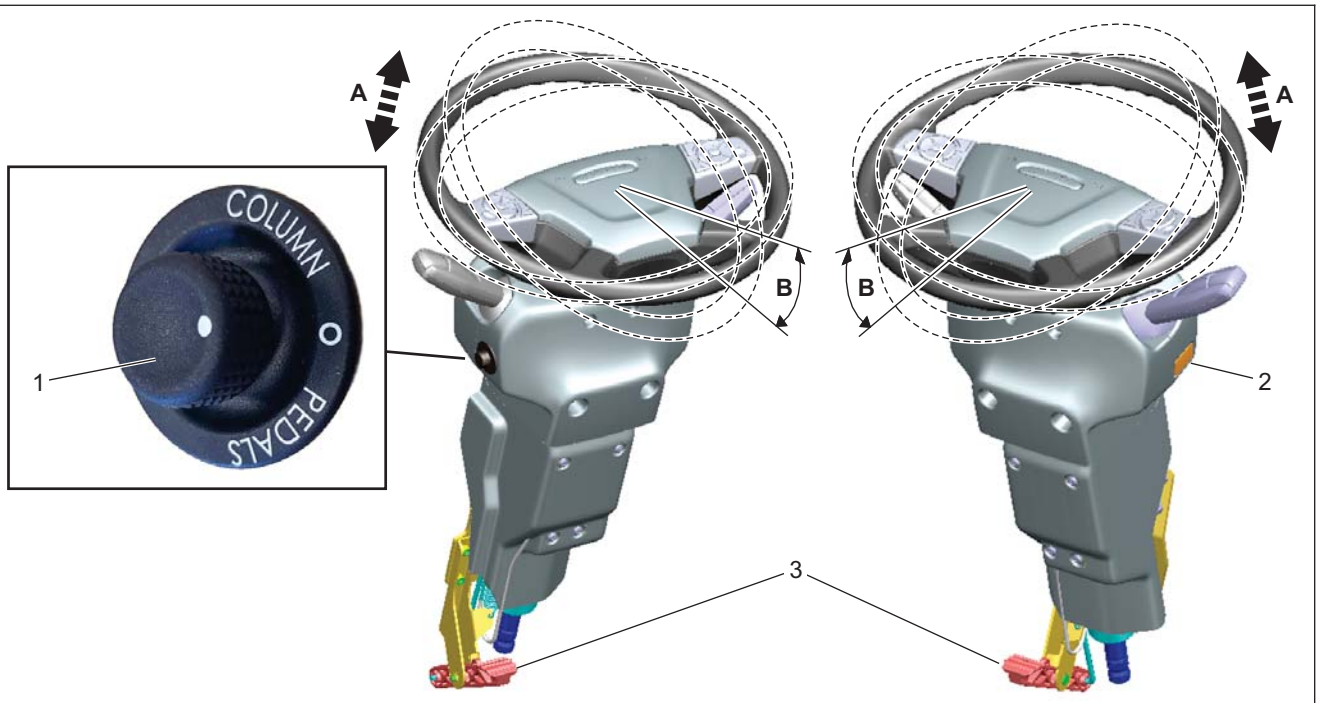

03/06/2019 f462366

Some steering columns are equipped with the toggle switch but it only adjusts the brake and throttle pedals. Use the foot pedal on these vehicles to tilt and telescope the steering wheel.

A. Telescope
B. Tilt
1. Steering Column and Pedal Toggle Switch
2. Hazard Warning Light Switch
3. Foot Pedal (standard column only)

Fig. 5.13, Tilt/Telescope Steering Column

An optional regen-inhibit switch provides additional control over the aftertreatment regeneration process. Pressing the bottom of the regen-inhibit switch prevents a regen from occurring while driving. After the vehicle has been shut down and restarted, regens will occur normally unless the inhibit switch is pressed again. See **Fig. 5.15**.

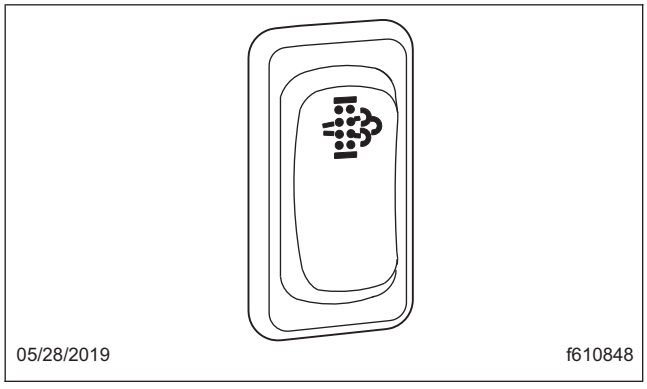

05/28/2019 f610848

Fig. 5.14, Regen Switch

Low Idle Adjustment Switch

On some vehicles equipped with Cummins ISB engines, the engine low idle speed can be adjusted in 25 rpm increments with a low idle adjustment switch. On these vehicles, the engine control unit is programmed to allow low idle speeds between 700 and 875 rpm.

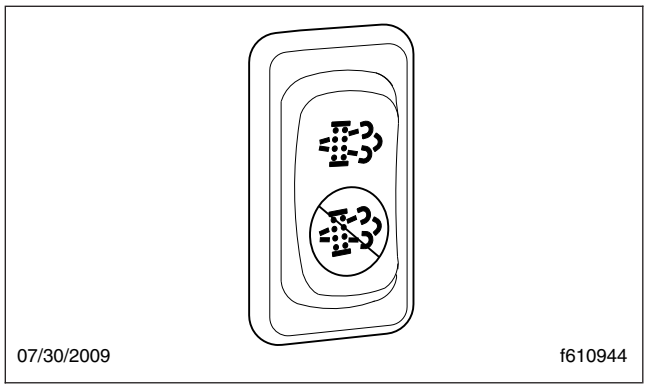

Fig. 5.15, Regen Inhibit Switch

6

Engines

Engine Starting 6.1
Engine Operation 6.2
High Idle Options 6.3
Exhaust Aftertreatment System (ATS) 6.3
Engine Shutdown 6.9

Engine Starting

General Information

This engine chapter is to serve as a guide for best practices only. Each make and model engine may have operating characteristics that are unique to that particular engine, and will be documented in the engine manufacturer's literature. Always refer to specific instructions and recommendations from the engine manufacturer.

NOTE: Before starting the engine, read **Chapter 4** and **Chapter 5** of this manual for detailed information on how to read the instruments and operate the controls.

Normal Starting

⚠ WARNING

Do not use any starting aid, such as ether, in engines with an air intake heater. This could cause an explosion and serious personal injury or death.

NOTE: Cummins engines are run on a dynamometer before being shipped from the factory. They do not require a break-in period.

IMPORTANT: Special break-in oils are not recommended for new or rebuilt Cummins engines.

NOTICE

If a vehicle does not start on the first attempt, make sure that the engine has completely stopped rotating before reapplying the starter switch. Failure to do so can cause the pinion to release and re-engage, which could cause ring gear and starter pinion damage.

Moving a vehicle with the starter and/or using the starter to bump the engine for maintenance procedures is strictly prohibited. Use of these methods to bump the engine over or move the vehicle can cause the pinion to release and re-engage, which could cause ring gear and starter pinion damage.

IMPORTANT: Ring gear and starter pinion damage caused by improper starting procedures is not warrantable.

NOTICE

Do not crank the engine for more than 30 seconds at a time. Wait two minutes after each try to allow the starter to cool. Failure to do so could cause starter damage.

NOTICE

If the engine is equipped with a turbocharger, protect the turbocharger during start-up by not depressing the accelerator pedal until normal engine idle oil pressure registers on the gauge.

1. Before engine start-up, complete the pre- and post-trip inspections and maintenance procedures in **Chapter 12**.
2. Set the parking brake.
3. Place the transmission in neutral.
4. Turn the key to the ON position and allow the gauge sweep to complete. The audible alert will sound for approximately four seconds.

   During cold conditions, the WAIT TO START lamp may illuminate. Wait until the lamp goes out before turning the key to START.
5. After the gauge sweep has completed, turn the key to the START position.

NOTICE

Do not rev the engine if the oil pressure gauge indicates no oil pressure. Shut down the engine if oil pressure does not build within approximately ten seconds. Check to determine the cause of the problem. Operating the engine with no oil pressure will damage the engine.

6. Apply load gradually during the warm-up period.

NOTICE

If the oil pressure gauge indicates no oil pressure, shut down the engine within approximately ten seconds to avoid engine damage.

7. Check the oil pressure gauge for any drop in lubricating oil pressure or mechanical malfunction in the lubricating oil system. Minimum oil pressure at idle is 7 psi (50 kPa).

Cold-Weather Starting

See the engine manufacturer's operation manual for starting aids that are approved for specific engines.

If the unit is equipped with a block heater, start the block heater two to four hours before travel.

Engine Operation

Normal Operation

⚠ WARNING

Do not operate the engine in an area where flammable vapors such as gasoline or diesel fumes are present. Shut off the engine when in an area where flammable liquids or gases are being handled. Failure to observe these precautions could result in serious injury or death.

Engines produce high horsepower and peak torque characteristics at low rpm. Because of this, it is not necessary to operate the engine at high rpm to deliver the required horsepower at the wheels. These characteristics may also result in less shifting and make shifting at lower rpm (to peak torque) more practical.

Depending on the vehicle gearing, the posted speed limit can sometimes allow operation in either of the top two gears. However, for improved operating efficiency (fuel economy and engine life), operate in the top gear at reduced rpm, rather than in the next lower gear at the maximum rpm. Cruise at partial throttle whenever road conditions and speed requirements permit. This driving technique permits operating within the most economical power range of the engine.

When approaching a hill, accelerate smoothly to start the upgrade at full power (2000 rpm or higher is recommended), then shift down as desired to maintain the optimum vehicle speed.

Engines are designed to operate over a wide speed range. More frequent shifting than necessary does not allow proper utilization of this flexibility. The driver who stays in top gear and uses the wider speed range will achieve the best fuel economy.

NOTICE

Do not allow the engine to exceed its governed speed, or serious engine damage could result.

The engine is effective as a brake on downhill grades, but take care not to overspeed the engine going downhill. Use a combination of brakes and gears to keep the vehicle under control at all times and to keep the engine speed below the rated governed rpm.

Cold-Weather Operation

Satisfactory performance of a diesel engine operating in low ambient temperatures requires modification of the engine, surrounding equipment, operating practices, and maintenance procedures. The lower the temperature, the greater the amount of modification required. See the engine manufacturer's operation manual for service products approved for use in cold weather engine operation.

If satisfactory engine temperature is not maintained, maintenance costs will increase due to greater engine wear. If the engine coolant gets too cold, raw fuel will wash the lubricating oil off the cylinder walls and dilute the crankcase oil, causing all moving parts of the engine to suffer from poor lubrication.

If the engine is in good mechanical condition and the precautions necessary for cold-weather operation are taken, ordinary cold weather will not cause difficulty in starting or loss of efficiency.

The following points are important to observe when operating in cold weather.

- Check for cracks in the battery cases, for corrosion of the terminals, and for tightness of the cable clamps at the terminals.
- Charge the batteries to full capacity. Replace damaged batteries.
- If equipped, turn off the battery disconnect switch after the engine is shut down to prevent battery discharge.
- Have the alternator output checked at an authorized Freightliner dealer.
- Check the condition and tension of the drive belts.
- Refer to the engine manufacturer's operation manual for recommended heaters, low-viscosity lubricating oils, winter-grade fuels, and approved coolants.
- Periodically check the coolant mix ratio (concentration of antifreeze in the coolant). Add more if necessary.

- At temperatures below -4°F (-20°C), a coolant preheater is recommended.

High Idle Options

NOTE: To operate the high idle options listed below, the vehicle must be stopped, the transmission shift lever placed in the Neutral (N) or Park (P) position, and the parking brake set.

IMPORTANT: Do not idle the engine for excessively long periods. The extreme heat may cause the bearings to seize or the oil seals to leak.

High Idle with Cruise Control

1. Place the shift lever in Neutral (N) or Park (P) and set the parking brake.
2. Press the cruise switch located on the dash to the ON position. Press the RESUME switch to accelerate the engine revolutions per minute (rpm) to the minimum set speed. To increase the engine rpm, press and hold the RESUME switch. To decrease the engine rpm, press and hold the SET switch.

NOTE: The rpm can also be increased by depressing the throttle pedal until the desired rpm is met, and then pressing the SET switch.

3. Disengage the cruise control by depressing the service brake pedal, or by moving the ON/OFF switch to the OFF position.

Voltage-Based Auto High Idle

1. Place the shift lever in Neutral (N) or Park (P) and set the parking brake.
2. The idle rpm will automatically increase when the voltage drops below 12.2 volts for 10 seconds. The rpm will incrementally increase every five seconds until 13.4 volts is achieved and maintained.
3. The Voltage-Based Auto High Idle system is disengaged by depressing the service brake pedal.

IMPORTANT: The Voltage-Based Auto High Idle system will not return to normal operation until one of the following occurs: The parking brake is depressed and released, the key switch is turned to the OFF position, or the transmission gears are changed.

Exhaust Aftertreatment System (ATS)

Model year 2007 and later vehicles and/or engines domiciled in the U.S. or Canada are designed to meet Emission and Fuel Efficiency Standards of the U.S. Federal Environmental Protection Agency (EPA), the National Highway Traffic Safety Administration (NHTSA), Emission Regulations under the Canada Motor Vehicle Safety Act in Canada, and the California Air Resources Board (CARB) effective as per the applicable emission model year. To determine an engine's or vehicle's emission model year, refer to the respective EPA/CARB certification label.

IMPORTANT: Depending on local jurisdictional guidelines, vehicles that are domiciled outside of the U.S. and Canada may not have emissions aftertreatment systems (ATS) that are compliant with EPA regulations.

NOTICE

Follow these guidelines for engines that comply with EPA07 or newer regulations, or damage may occur to the aftertreatment device (ATD) and the warranty may be compromised.

- Use ultralow-sulfur diesel with 15 ppm sulfur content or less.
- Do not use fuel blended with used engine lube oil or kerosene.
- Engine lube oil must have a sulfated ash level less than 1.0 wt %; currently referred to as CK-4 oil.

NOTICE

FA-4 engine lube oil is available, but is not compatible with all engines. See the engine manufacturer's operation manual to determine if FA-4 oil can be used in your vehicle's engine. Failure to do so could lead to engine damage and is not warrantable.

IMPORTANT: Using non-specification fuels or oils can lead to shortened diesel particulate filter (DPF) cleaning or replacement intervals. For example, using CK-4+ oil with 1.3% sulfated ash (30% more ash content) may result in the need for DPF cleaning or replacement 20 to 30% sooner than would normally be required.

IMPORTANT: See the engine manufacturer's operation manual for complete details and operation of the ATS.

EPA07 Engines

The EPA07 ATS varies according to engine manufacturer and vehicle configuration, but the exhaust muffler is replaced by an aftertreatment device (ATD). Inside the ATD, the exhaust first passes over the diesel oxidation catalyst (DOC), then passes through the diesel particulate filter (DPF), which traps soot particles. The soot is burned to ash during a process called regeneration (regen).

EPA10 and Newer Engines

To meet EPA guidelines, engines that are compliant with EPA10 and newer regulations use an ATS that has, in addition to a DOC/DPF device like that used in an EPA07 ATD, a Selective Catalytic Reduction (SCR) device to reduce NOx downstream of the engine.

After exhaust gases leave the engine, they flow into the ATS. First they flow into a two-part ATD, comprised of a diesel oxidation catalyst (DOC), and a diesel particulate filter (DPF). The DPF traps soot particles, then exhaust heat converts the soot to ash in the DPF, in a process called regeneration (regen). The harder an engine works, the better it disposes of soot. Passive regen occurs when the engine is running under load and regen occurs without input. If the engine isn't running hot enough, the electronic controls may initiate an active regen, whereby extra fuel is injected into the exhaust stream before the diesel particulate filter, to superheat the soot trapped in the filter and reduce it to ash. Both types of regen occur without driver input.

⚠ WARNING

Active regeneration can occur automatically anytime the vehicle is moving. The exhaust gas temperature could reach 1500°F (816°C), which is hot enough to cause a fire, heat damage to objects or materials, or personal injury to persons near the exhaust outlet.

The exhaust temperature can remain high even after the vehicle has stopped. When stopping the vehicle shortly after an automatic regen, ensure the exhaust outlets are directed away from structures, vegetation, flammable materials, and anything else that may be harmed by exposure to high heat.

Operating at reduced engine load will allow soot to accumulate in the DPF. When this occurs, the DPF lamp illuminates, indicating that a regen must be performed, and the driver must either bring the vehicle up to highway speed to increase the load, or park the vehicle and initiate a parked regen. See *Parked Regen*, later in this chapter for instructions.

After the exhaust stream passes through the ATD, it flows through another canister housing the SCR device. A controlled quantity of diesel exhaust fluid (DEF) is injected into the exhaust stream, where heat converts it to ammonia (NH_3) gas. This mixture flows through the SCR device, where the ammonia gas reacts with the NOx in the exhaust, to produce harmless nitrogen (N_2) and water vapor (H_2O), which then exits out of the tailpipe.

ATS Warning Lamps

Warning lamps in the driver's message center alert the driver of situations with the ATS.

- An illuminated DPF lamp indicates a regen is needed. See **Fig. 6.1**.

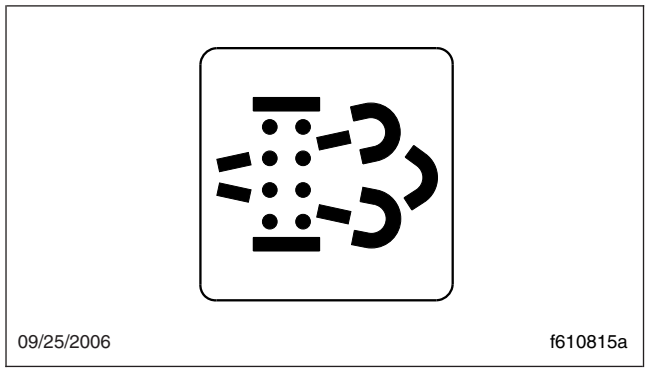

Fig. 6.1, Diesel Particulate Filter (DPF) Lamp

- A slow, 10-second flashing of the high exhaust system temperature (HEST) lamp alerts the driver that a parked regen is in progress, but the exhaust temperatures are still relatively cool. It also indicates that the high-idle speed is being controlled by the engine software, not the driver. See **Fig. 6.2**.
- A steadily illuminated HEST lamp alerts the operator of high exhaust temperatures when vehicle speed is below 5 mph (8 km/h) while it is performing an automatic regen, and during a parked regen.

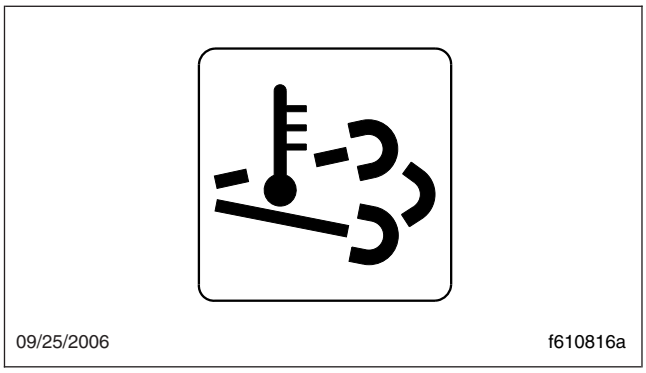

Fig. 6.2, High Exhaust System Temperature (HEST) Lamp

- An illuminated DEF warning lamp in the gauge, indicates that the DEF tank should be refilled at the next opportunity.

Parked Regen

⚠ DANGER

During parked regeneration, exhaust temperatures are very high, and could cause a fire, heat damage to objects or materials, or personal injury to persons near the exhaust outlet.

Before initiating a parked regeneration, make certain the exhaust outlets are directed away from structures, vegetation, flammable materials, and anything else that may be harmed by prolonged exposure to high heat.

A reference label is included with the driver's documentation package initially in the glove box, that explains the ATS warnings, and actions required to avoid further engine protection sequences. See **Fig. 6.3**.

The regen switch, located on the dash, is used to initiate a parked regen of the aftertreatment device. See **Fig. 6.4.**

NOTE: The DPF lamp must be illuminated before the regen switch will initiate a parked regen.

An optional regen-inhibit switch provides additional control over the aftertreatment regeneration process. Pressing the bottom of the regen-inhibit switch prevents a regen from occurring while driving. After the vehicle has been shut down and restarted, regens will occur normally unless the inhibit switch is pressed again. See **Fig. 6.5**.

To initiate a parked regeneration, perform the following steps.

1. Park the vehicle away from all combustible and flammable materials. Chock the tires. Start and warm the engine until the coolant temperature is at least 150°F (66°C).
2. Set the parking brake. If the parking brake was already set, it must be released, then set again.

   For manual transmissions, fully depress the clutch pedal, put the transmission in neutral, then release the pedal.

   If the vehicle has a two-pedal automated transmission, shift it into gear, then back to neutral.

IMPORTANT: The driver is responsible for ensuring, during the entire regen cycle, that anything that could be harmed by exposure to high heat does not come in contact with the exhaust gases flowing from the outlets.

3. Press and hold the regen switch for 4 seconds. The engine will increase rpm and initiate the regen process.
4. The regen cycle will finish after 20 to 60 minutes, at which time engine idle speed will drop to normal and the vehicle can be driven normally. The HEST lamp may be illuminated, but will go out when the vehicle speed exceeds 5 mph (8 km/h), or the system has cooled to normal operating temperature.
5. To stop a parked regen at any time during the process, engage the clutch, brake, or accelerator pedal, or turn off the engine.

DPF Maintenance

Eventually ash will accumulate in the DPF and the filter will require servicing. DPF servicing must be performed by an authorized technician, following the engine manufacturer's instructions. A record must be maintained for warranty purposes, that includes:

- date of cleaning or replacement;
- vehicle mileage;
- particulate filter part number and serial number.

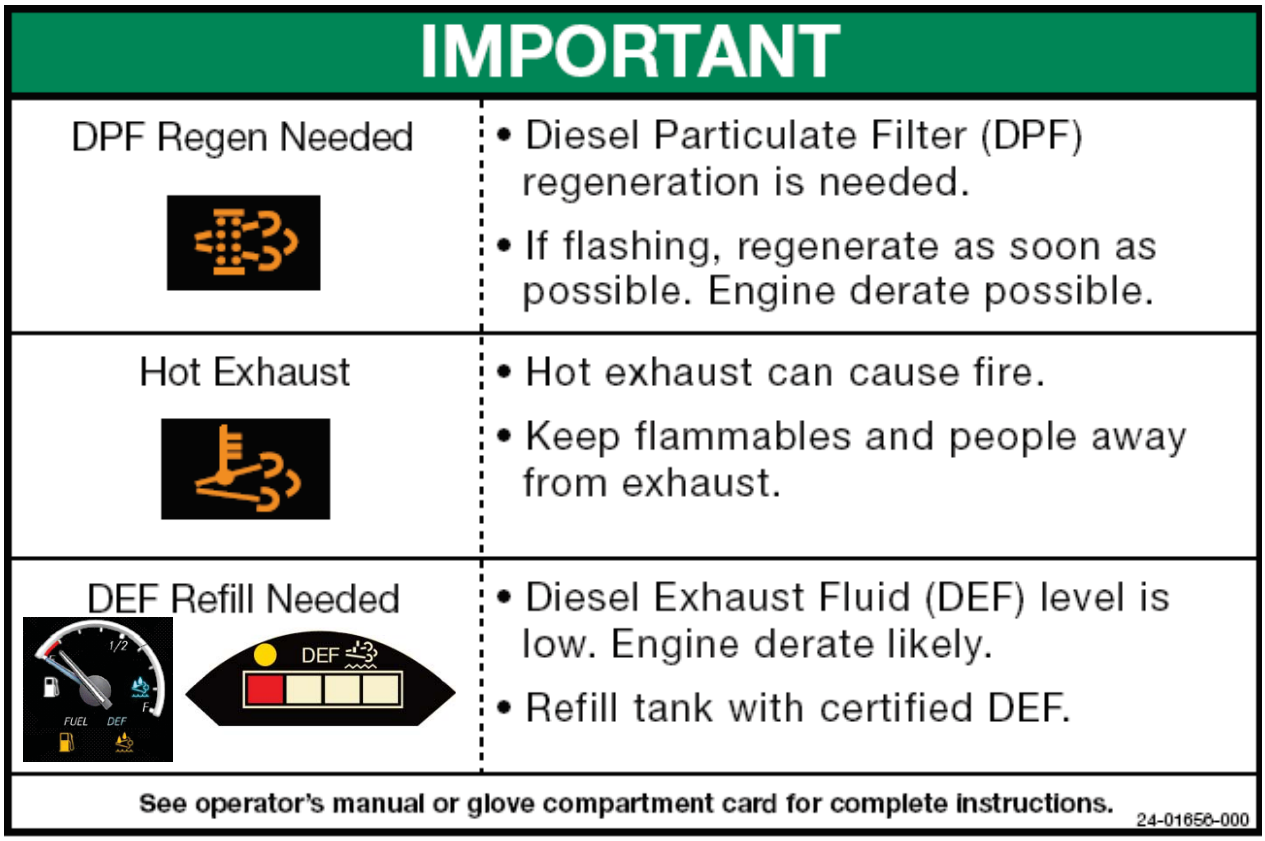

Fig. 6.3, Exhaust-Aftertreatment Warnings Reference Label

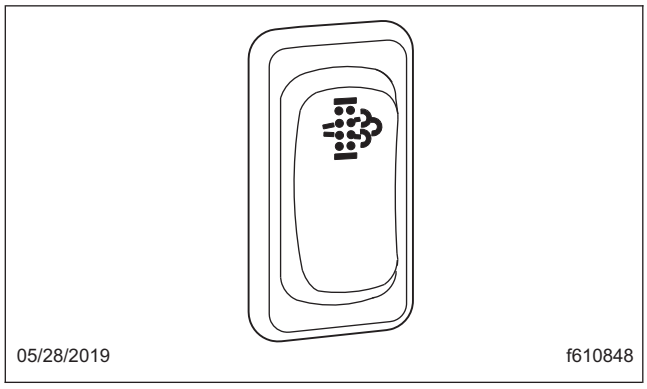

Fig. 6.4, Regen Switch

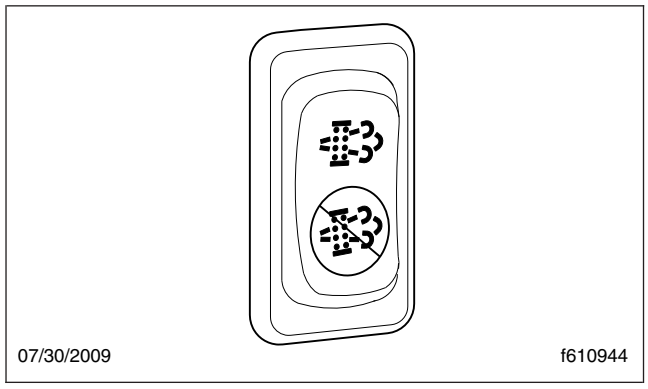

Fig. 6.5, Regen Inhibit Switch

Diesel Exhaust Fluid and Tank, EPA10 and Newer Engines

Diesel Exhaust Fluid

Diesel exhaust fluid (DEF) is used in the ATS to lower NOx in the exhaust stream. DEF is colorless and close to odorless (it may have a slightly pungent odor similar to ammonia). It is nontoxic, nonflammable, and biodegradable. It is mildly corrosive to aluminum, but does not affect the strength or structure of the aluminum.

White crystals may be noticeable around components that come into contact with DEF. The crystals are easily removed with water.

DEF consumption varies depending on ambient conditions and vehicle application.

Freezing Conditions

DEF freezes to slush at around 12°F (-11°C). It is not damaged or destroyed if frozen, and is fully usable when thawed. The DEF in the tank is allowed to freeze while a vehicle is non-operational. At start-up, normal operation of the vehicle is not inhibited if the DEF is frozen; an immersion heater with engine coolant flowing through it warms the DEF once the engine is running, allowing the SCR system to operate.

Pre-2013 DEF supply lines are electrically-heated and are purged when the engine is shut down; complete purging of the DEF lines requires approximately five minutes after the engine is shut down.

DEF supply lines with engine model year 2013 and newer are designed to survive freezing conditions while containing DEF, so purging is not required.

DEF Tank

Engines that are compliant with EPA10 and newer regulations are equipped with a DEF tank located between the ATS and the fuel tank, or an optional location forward of the fuel tank. The DEF tank has a 19 mm filler neck inlet that prevents the hose from a diesel outlet from being inserted, and has a blue cap for easy identification.

The DEF tank will require filling a minimum of approximately every second diesel refuel depending on the DEF tank capacity. The Walk-In Van uses a 10-gallon tank capacity. DEF consumption is approximately 2% of fuel consumption, dependent on vehicle operation. For every 50 gallons of diesel fuel consumed, approximately 1 gallon of DEF will be consumed.

DEF Gauge

The DEF level is measured in a stand-alone gauge. See **Fig. 6.6**.

The DEF gauge has a warning lamp that illuminates when the DEF tank is near empty, and a DEF lightbar that indicates the level in the DEF tank as follows.

- Four bars illuminated green—Between 75% and 100% full
- Three bars illuminated green—Between 50% and 75% full
- Two bars illuminated green—Between 25% and 50% full
- One bar illuminated green—Between approximately 10% and 25% full
- One bar illuminated amber—DEF low, refill DEF
- One bar flashing red—DEF empty, refill DEF

DEF Warnings and Engine Limits

IMPORTANT: Ignoring the DEF warning lights and not refilling the DEF will result in limited engine power with a speed limit of 5 mph (8 km/h) eventually being applied. See the Cummins Operation and Maintenance Manual for further information.

DEF Level Low—Initial and Critical Warnings

When the DEF level reads low the following warnings strongly encourage the driver to refill the DEF tank. See **Fig. 6.7**.

- The CHECK engine lamp flashes for 30 seconds when the vehicle is started.
- The DEF warning lamp illuminates.
- One bar of the DEF-level lightbar illuminates solid amber.

Engine performance is limited, with progressively harsher engine power limits applied.

The DEF tank must be filled to cancel the warning sequence.

DEF Empty

When the DEF level reads empty, the following warnings are activated. See **Fig. 6.8**.

- The DEF warning lamp flashes.
- The CHECK engine lamp illuminates.
- One bar of the DEF-level lightbar flashes red.
- A brief audible alert notifies the driver.

Engine performance is limited, with progressively harsher engine power limits applied.

The DEF tank must be filled to cancel the warning sequence.

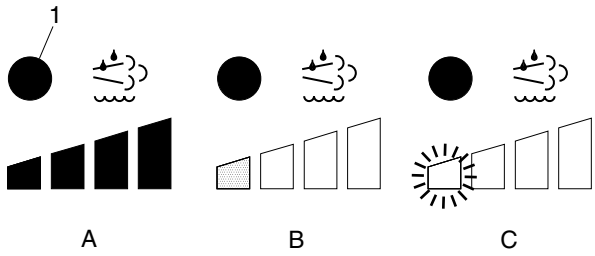

A. Green bars—DEF level indicators.
B. One bar illuminated amber—DEF low, refill DEF.
C. One bar flashing red—DEF empty, refill DEF.
1. Low DEF Warning Lamp

Fig. 6.6, DEF Gauge

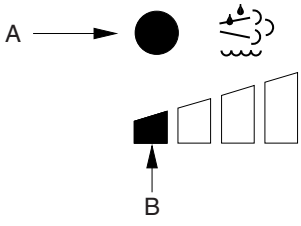

A. DEF Warning Lamp (illuminates constantly)
B. DEF-Level Lightbar (1 bar solid amber)

Fig. 6.7, DEF Level Low Initial and Critical Warnings

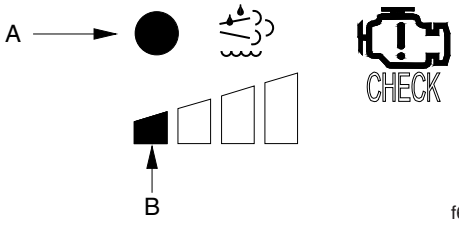

NOTE: Engine performance is limited.
A. DEF Warning Lamp (flashing)
B. DEF-Level Lightbar (1 bar flashing red)

Fig. 6.8, DEF Empty Warning

DEF Level Empty and Ignored

If the empty warning is ignored and the DEF is not refilled, the DEF warning lamp flashes, one bar of the DEF-level lightbar flashes red, and the red STOP engine lamp illuminates in addition to the CHECK engine warning lamp. A brief audible alert notifies the driver. See **Fig. 6.9**.

If the DEF tank is not refilled, a 5 mph (8 km/h) speed limit will be applied after the next engine shutdown, or while parked and idling.

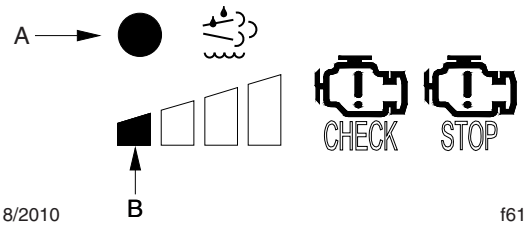

NOTE: The STOP engine, CHECK engine, and DEF lamps illuminate, engine power is limited, speed limit of 5 mph (8 km/h).
A. DEF Warning Lamp (flashing)
B. DEF-Level Lightbar (1 bar flashing red)

Fig. 6.9, DEF Empty and Ignored Warning

DEF Quality or SCR Tampering

NOTICE

Once contaminated DEF has been detected in the SCR system, the vehicle must be taken to an authorized service center to check the SCR system for damage, and to deactivate the warning light and engine limits.

If contaminated DEF or tampering is detected, the DEF warning light flashes, and engine performance is limited with progressively harsher engine power limits applied. If the fault is not corrected, the CHECK engine lamp illuminates, then the STOP engine lamp illuminates and a 5 mph (8 km/h) speed limit will be applied after the next engine shutdown, or while parked and idling. See **Fig. 6.9**.

Engine Shutdown

NOTICE

Except in an emergency, do not shut down the engine when the coolant temperature is above 194°F (90°C). To do so could damage the engine.

1. With the vehicle stopped, place the transmission in the neutral (N) position and set the parking brake.
2. It is important to idle an engine for 3 to 5 minutes before shutting it down. This allows the lubricating oil and the coolant to carry heat away from the combustion chambers, bearings, shafts, and seals.

IMPORTANT: Long periods of idling are not good for an engine because the combustion chamber temperatures drop so low that the fuel may not burn completely. This will cause carbon to clog the piston rings and may result in stuck valves.

3. Do not idle the engine for excessively long periods.
4. Turn the ignition key to the OFF position and shut down the engine.

7

Transmissions

Driving Precautions 7.1
Allison Automatic Transmissions 7.1

Driving Precautions

The vehicle operator should use care when accelerating or downshifting on slippery road surfaces. Sudden acceleration or engine braking, caused by shifting to a lower gear range, can result in a loss of vehicle control. This is very important on snow- or ice-covered roads. See **Chapter 9** for information on brake operation.

If the vehicle is stuck in sand or mud, do not attempt to pull the vehicle out under its own power. Request professional towing assistance.

NOTICE

Do not attempt to rock the vehicle. If rocking the vehicle is necessary, even at low speeds, it may cause engine overheating, axle damage, transmission damage or failure, or tire damage.

Do not coast the vehicle in neutral. Severe transmission damage may result and the vehicle will not have the benefit of engine braking.

⚠ WARNING

To reduce the risk of personal injury, before going down a steep or long grade, reduce speed and downshift the transmission. Do not hold the brake pedal down too long or too often while going down a steep or long grade. This could cause the brakes to overheat, reducing their effectiveness. As a result, the vehicle will not slow down at the usual rate. Failure to take these steps could result in loss of vehicle control.

To avoid skidding on slippery roads, do not downshift into "1" (Low) at speeds above 20 mph (32 km/h).

On slippery surfaces, avoid quick movements of the steering wheel. Decrease your speed and allow for extra stopping distance required by these conditions.

Avoid driving through flooded areas unless you are sure the water is no higher than the bottom of the wheel rims. Drive through slowly. Allow adequate stopping distance since wet brakes do not grip well. After driving through water, gently apply the brakes several times while the vehicle is moving slowly to dry the brakes.

When driving on icy or graveled surfaces, reduce speed. Avoid sharp turning maneuvers.

Allison Automatic Transmissions

Safety Precautions

⚠ WARNING

Do not leave the vehicle unattended with the engine running. If you leave the vehicle and the engine is running, the vehicle can move suddenly, which could result in personal injury or property damage.

Perform the following steps if you have to leave the cab with the engine running (for example, when checking the transmission fluid):

1. Bring the vehicle to a complete stop using the service brake.
2. Ensure that the engine is at low idle rpm.
3. Depending on the series of transmission installed in the vehicle, put the transmission in either:
   - Park (P);
   - Auto-Apply Parking Brake (PB); or
   - Neutral (N) if P or PB is not available.
4. Apply the parking brake, if applicable, and make sure it is properly engaged.
5. Slowly release the service brake.
6. Chock the rear tires and take any other steps necessary to keep the vehicle from moving.

Range Inhibit Indicator, 2000 Series Transmissions

A RANGE INHIBIT indicator is a standard feature of the 2000 series transmissions. The RANGE INHIBIT indicator comes on to alert the driver that transmission operation is being inhibited and that the range shifts being requested by the driver may not occur. When certain operating conditions are detected by the transmission control module (TCM), the controls will lock the transmission in the current operating range.

Shift inhibits occur under the following conditions:

- Shifts from Neutral (N) to Reverse (R) or from Neutral (N) to a forward range when the engine is above idle, greater than 900 rpm.

- Forward/Reverse (R) directional shifts are typically not permitted if appreciable output shaft speed is detected.
- When some types of unusual transmission operating conditions are detected by the TCM, the TCM temporarily limits transmission operation until the vehicle can be driven to a service location. When this type of situation is detected, the TCM will lock the transmission in a safe gear range.

Operating Instructions, On-Highway Transmissions

Allison automatic transmissions are electronically controlled and provide five or six forward ranges and one Reverse (R) range. Typically, a T-handle shift control is used by the driver to select the ranges. See **Fig. 7.1** and **Fig. 7.2**.

For vehicles equipped with a transmission stalk switch, see 'Allison Transmission Multifunction Stalk Switch' for operating instructions.

NOTE: The following information describes the various transmission ranges. Some ranges are not available, depending on the series of transmission installed in the vehicle.

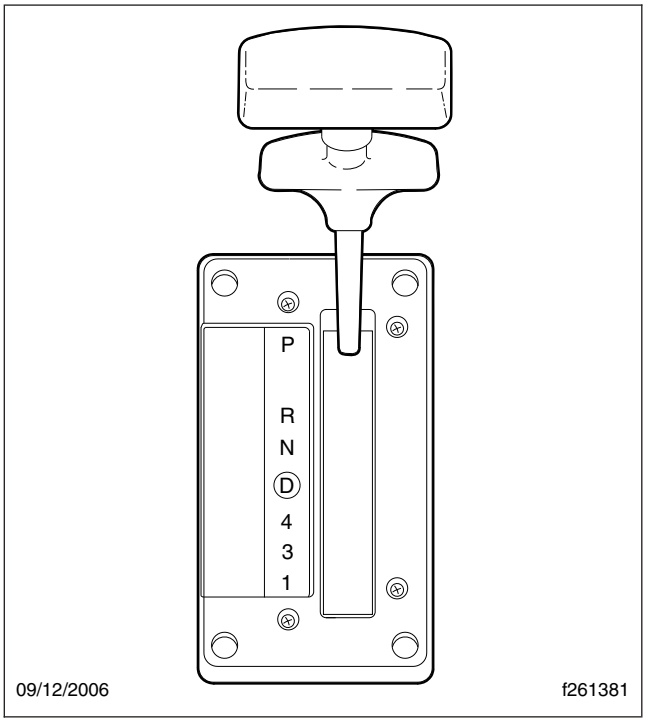

Fig. 7.1, T-Handle Shift Control (typical shifter)

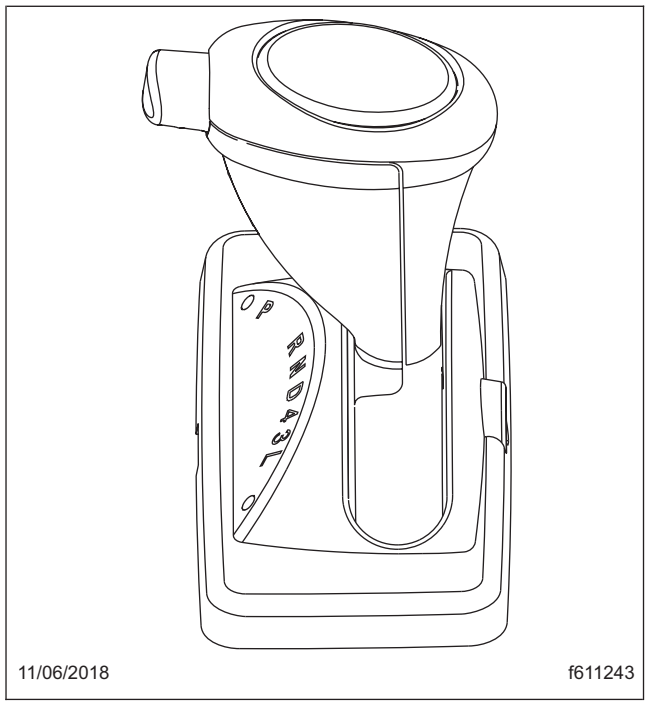

Fig. 7.2, T-Handle Shift Control (optional shifter)

Park (P)

Use Park (P) when starting or shutting down the engine, to check vehicle accessories, and to operate the engine in idle for longer than 5 minutes. This position places the transmission in Neutral (N) and engages the park pawl.

Auto-Apply Parking Brake (PB)

The Auto-Apply Parking Brake (PB) places the vehicle in Neutral (N) and applies the parking brake.

Reverse (R)

Reverse (R) is used to back the vehicle. When the selector is in Reverse (R), the reverse warning signal will sound. Always bring the vehicle to a complete stop before shifting from a forward range to Reverse (R), or from Reverse (R) to a forward range.

NOTICE

Extended idling in Reverse (R) may cause transmission overheating and damage.

Do not idle in Reverse (R) for more than 5 minutes. Select Park (P), Auto-Apply Parking Brake (PB), or Neutral (N) when time at idle exceeds 5 minutes.

NOTE: The shift into Reverse (R) may not succeed if a range inhibitor is active. Check for illumination of the RANGE INHIBIT indicator.

Neutral (N)

The Neutral (N) position places the transmission in Neutral (N). This position is used when starting the engine and for stationary operation.

⚠ WARNING

Failure to apply the vehicle parking brakes when the transmission is in neutral may allow the vehicle to move unexpectedly, possibly causing property damage or personal injury.

When Neutral (N) is selected, the vehicle service brakes, or parking brake must be applied. Selecting Neutral (N) does not apply vehicle brakes unless an auxiliary system to apply the parking brake is installed.

⚠ WARNING

Do not coast in neutral. Coasting in neutral can cause an accident, possibly resulting in severe personal injury or death.

Do not let the vehicle coast in Neutral (N). If the vehicle is allowed to coast in Neutral (N), you could lose control of the vehicle.

NOTICE

Coasting in Neutral (N) can cause severe transmission damage.

Drive (D)

⚠ WARNING

When going downhill, use a combination of downshifting, braking, and other retarding devices to control vehicle speed and the engine's rated governed speed. Failure to do so could reduce vehicle braking, possibly causing loss of vehicle control and resulting in personal injury or property damage.

In the Drive (D) position, the transmission will initially go into First (1) range when Drive (D) is selected. As vehicle speed increases, the transmission will upshift automatically through each available range up to Fourth (4) range or Fifth (5) range. As the vehicle slows, the transmission will downshift automatically.

When going downhill, downshift to a lower transmission range to increase engine braking and to help maintain control. The transmission has a feature to prevent automatic upshifting above the lower range selected. However, during downhill operation, the transmission may upshift to the next higher range, if the engine is exceeding its governed speed in the lower range.

NOTICE

Do not idle in Drive (D) for more than 5 minutes. Extended idling in Drive (D) may cause transmission overheating and damage. Always select Auto-Apply Parking Brake (PB) or Park (P) if time at idle is longer than 5 minutes.

NOTE: The shift into Drive (D) may not succeed if a range inhibitor is active. Check for illumination of the RANGE INHIBIT indicator.

Fourth and Third Ranges (4 and 3) [optional]

Use the Fourth (4) or Third (3) range for city traffic and for braking on steep downgrades.

Third and Second Ranges (3 and 2) [standard]

Use the Third (3) or Second (2) range for heavy city traffic and for braking on steeper downgrades.

First Range (1)

Use First (1) range when pulling through mud or deep snow, when maneuvering in tight spaces, or when driving up or down very steep grades. First (1) range provides the vehicle with its maximum driving torque and maximum engine braking effect.

Automatic Transmission Multifunction Stalk Switch

For Allison Transmission Operators Manual and Warranty Information for on-highway vehicle applications, visit: **www.allisontransmission.com/my-allison/customer** or scan the QR code. See **Fig. 7.3**.

Some vehicles are equipped with a multifunction stalk switch shown in **Fig. 7.4** and **Fig. 7.5**. This control can be used to request direction, neutral, low, manual shifts, change driving mode, preselect lower



05/17/2022 f261566

Fig. 7.3, Allison Transmission QR Code

ranges, and set engine brake levels. Forward shifts can be made either automatically or by using manual mode. See **Table 7.1** for an overview of control functionality.

NOTE: On some vehicles, the engine brake only has off and high intensity options.

The transmission has electronic shift controls that can be programmed to allow the use of different numbers of geared speeds. For instance, the transmission can be programmed to operate as a 4-speed, 5-speed, or 6-speed unit in the "primary" shift mode. If needed, a "secondary" shift mode can be programmed to provide another shift configuration to optimize vehicle use under different operating conditions. To activate a secondary shift mode, or other special functions programmed into the electronic control unit (ECU), briefly depress the mode switch on the multifunction stalk switch control; see **Fig. 7.4**, Ref. B and Ref. C.

Direction Switch

Use the direction switch to request drive (D), neutral (N), or reverse (R). See **Fig. 7.4**, Ref. A.

Mode Switch

The driving mode can be changed using the mode switch on the shift control. See **Fig. 7.4**, Ref. B and Ref. C.

Gear Switch

Gear shifts can be requested manually; push the lever away to request a downshift, or pull the lever toward you to request an upshift. See **Fig. 7.4**, Ref. D and E. See **Table 7.1** for more information about upshift and downshift requests.

Functionality, Automatic Transmission Shift Control		
Function/Switch	**Action/Position**	**Request**
Direction	**All Transmissions**	
	D	Forward gears
	N	Neutral
	R	Reverse gears
Mode	Short press	Switch to automatic mode when in manual mode.
	Long press	Switch between economy or performance modes.
Gear	**Allison Automatic Transmissions**	
	Short pull on the lever	Upshift, single gear
	Pull on the lever in quick repetitions	Upshift, multiple gears
	Short push on the lever	Downshift, single gear
	Push on the lever in quick repetitions	Downshift, multiple gears
Engine Brake	**Engine Brake Functions**	
	Lever at position 0 (top)	Engine brake off
	Lever at position 1	Low intensity
	Lever at position 2	Medium intensity
	Lever at position 3 (bottom)	High intensity

Table 7.1, Functionality, Automatic Transmission Shift Control

Engine Brake

NOTE: On some vehicles, the engine brake only has off and the high intensity level option.

The engine brake is controlled by the lever position as shown in **Fig. 7.5**. At the top position, the engine brake is off, and at the three lower positions, the engine brake is on and the intensity (low, medium, high) increases with each step down. For more information about using the engine brake, see **Chapter 9**.

Power Up and Shift into Gear

1. Ensure the parking brake is set and neutral (N) is selected on the shift control.
2. Start the engine.
3. Apply the service brake.
4. Select the desired starting gear.
5. Release the parking brake.
6. Release the service brake and apply the accelerator.

Gear Display

The current transmission gear and driving mode are displayed in the instrument panel. See **Fig. 7.6**.

Operation Tips

NOTICE

Do not allow the vehicle to coast in neutral. This can result in severe transmission damage. Also, no engine braking is available.

⚠ WARNING

Never shift from neutral (N) to drive (D) or reverse (R) at engine speeds above idle. The vehicle will lurch forward or backward, which could cause property damage and personal injury.

NOTICE

The engine should never be operated for more than thirty seconds at full throttle with the transmission in gear and the output stalled. Prolonged operation of this type will overheat the transmission fluid and will result in severe damage to the transmission.

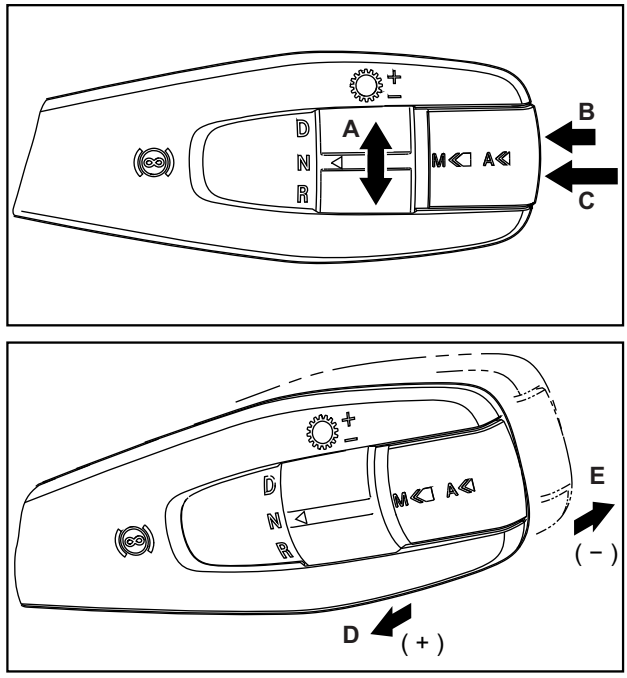

See **Table 7.1** for a description of control functionality.

A. Rotate for drive (D), neutral (N), or reverse (R).
B. Short press for automatic mode when in manual mode.
C. Long press to switch between economy or performance mode.
D. Pull for upshift (+) request.
E. Push for downshift (-) request.

Fig. 7.4, Automatic Transmission Multifunction Shift Control

The following tips highlight important operation principles.

- Use reverse (R) to back the vehicle. Completely stop the vehicle before shifting from a forward gear to reverse, or from reverse to forward.
- Select drive (D) for all normal driving conditions. The vehicle will start out in 1st gear (unless the transmission is programmed with 2nd gear start), and as speed increases, the transmission will upshift through each gear automatically. As the vehicle slows down, the transmission will downshift to the correct gear automatically.
- The pressure of your foot on the accelerator pedal influences the automatic shifting. When the pedal is fully depressed, the transmission

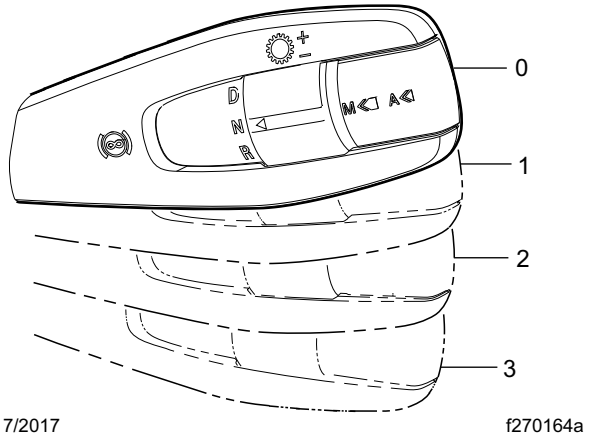

02/17/2017 f270164a

On some vehicles, the engine brake only has off and high intensity options.

0. Off
1. Low
2. Medium
4. High

Fig. 7.5, Engine Brake Positions



05/23/2018 f611506

Fig. 7.6, Gear Display in the Instrument Panel

will automatically upshift at higher engine speeds. A partially-depressed position of the pedal will cause the upshifts to occur at a lower engine speed.

- Occasionally the road, load, or traffic conditions make it desirable to restrict the automatic shifting to a lower range. The lower the gear range, the greater the engine braking power. When in manual mode, push or pull on the multifunction stalk switch to reach the desired gear. In the lower gear ranges, the transmission will not upshift above the highest gear selected unless the hold override upshift speed is exceeded.
- Use neutral and apply the parking brake when the vehicle is parked with the engine running.

Automatic Mode (A)

In automatic drive mode, upshifts and downshifts are made by the transmission without driver intervention.

Automatic mode is the default start mode. If in manual mode, a short push on the shift control mode switch activates the automatic mode (A). Rotate the D/N/R switch to drive (D), and press down on the throttle pedal. The transmission will shift automatically.

NOTE: If attempting to select a non-neutral mode without applying the service brakes, the transmission will not shift into gear. To shift into gear, select neutral, apply the service brakes, and select the desired mode again.

In drive, the start gear is automatically selected. The transmission automatically performs upshifts and downshifts.

Manual Mode (M)

In manual mode, the driver selects the maximum allowed range. This may be helpful when traversing steep grades, for example.

When in automatic mode and with the D/N/R switch set to drive (D), a long push on the shift control mode switch activates the manual mode (M). To increase selected range, pull the lever up (towards you); to decrease the selected range, push the lever down (away from you). The transmission will not upshift above the selected range unless the hold override upshift speed is exceeded.

When the transmission is in manual mode, the driver display shows the gear with an M. The current gear position appears next to the M with the target gear position next to it; M5 5 for example.

NOTE: The transmission may deny a downshift if the engine speed would fall outside of the acceptable range.

NOTE: If attempting to select a non-neutral mode without applying the service brakes, the transmission will not shift into gear. To shift into gear, select neutral, apply the service brakes, and select the desired mode again.

8

Steering System

Power Steering System 8.1
Steering Column Adjustment 8.1

Power Steering System

NOTE: When there is no load on the vehicle and the front tires are pointed straight ahead, the steering wheel spokes should be at the 9 o'clock and 3 o'clock positions, or within 10 degrees to either side. See **Fig. 8.1**. See **Group 46** of the *Walk-In Van Chassis Workshop Manual* for steering adjustment procedures.

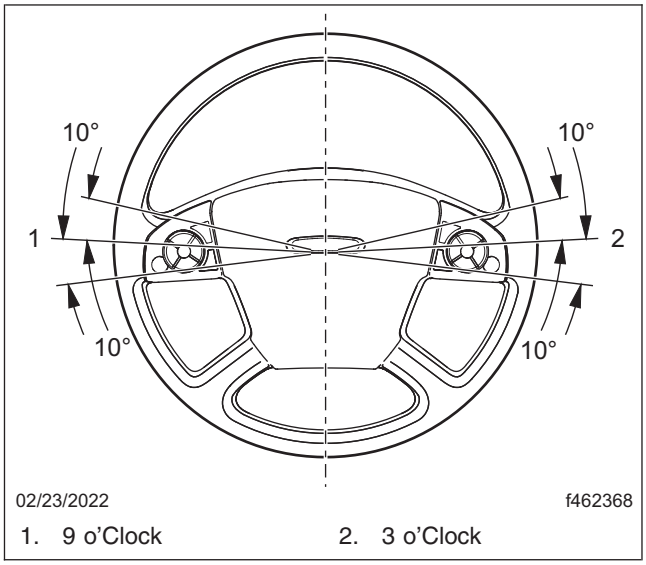

Fig. 8.1, Steering Wheel Centered

Steering Column Adjustment

Standard Tilt/Telescope Steering Column

⚠ WARNING

Never try to tilt or telescope the steering column while driving the vehicle. Doing so could cause loss of vehicle control and result in personal injury, or death, or property damage.

To tilt the steering column or telescope the steering wheel, press down on the foot pedal (located below the steering wheel) to release the steering column lock. Adjust the column and steering wheel to the desired position. Release the foot pedal to lock the steering column and steering wheel in place. See **Fig. 8.2**.

NOTE: For safety, the steering column is locked at all times unless the foot pedal is depressed.

Power Tilt/Telescope Steering Column and Adjustable Pedals

⚠ WARNING

Never try to tilt or telescope the steering column while driving the vehicle. Doing so could cause loss of vehicle control and result in personal injury, or death, or property damage.

Power tilt/telescope steering columns have a toggle switch on the left side of the steering column.

To tilt the steering column and telescope the steering wheel, rotate the toggle switch on the left-side of the steering column to the 'column' position. See **Fig. 8.2**. Push the toggle switch up or down to adjust the column to the desired height. Push the switch back toward the dash and the steering wheel goes in; pull the switch toward the driver and the steering wheel comes out. Once the column and steering wheel are at the desired position, rotate the toggle switch to the middle (off) position.

NOTE: Both the brake and throttle pedal position are adjusted at the same time.

Some steering columns are equipped with the toggle switch but it only adjusts the brake and throttle pedals. Use the foot pedal on these vehicles to tilt and telescope the steering wheel.

⚠ WARNING

Never try to adjust the brake or throttle pedal position while driving the vehicle. Doing so could cause loss of vehicle control and result in personal injury, or death, or property damage.

To adjust the position of the brake and throttle pedals, rotate the toggle switch on the left-side of the steering column to the 'pedals' position. See **Fig. 8.2**. Push the toggle switch toward the dash to move the pedals back or pull the toggle switch toward the driver to move the pedals forward. Once the pedals are at the desired position, rotate the toggle switch to the middle (off) position.

NOTE: For safety, the steering column and pedal toggle switch should be in the middle (off) position unless the vehicle transmission is in park (P).

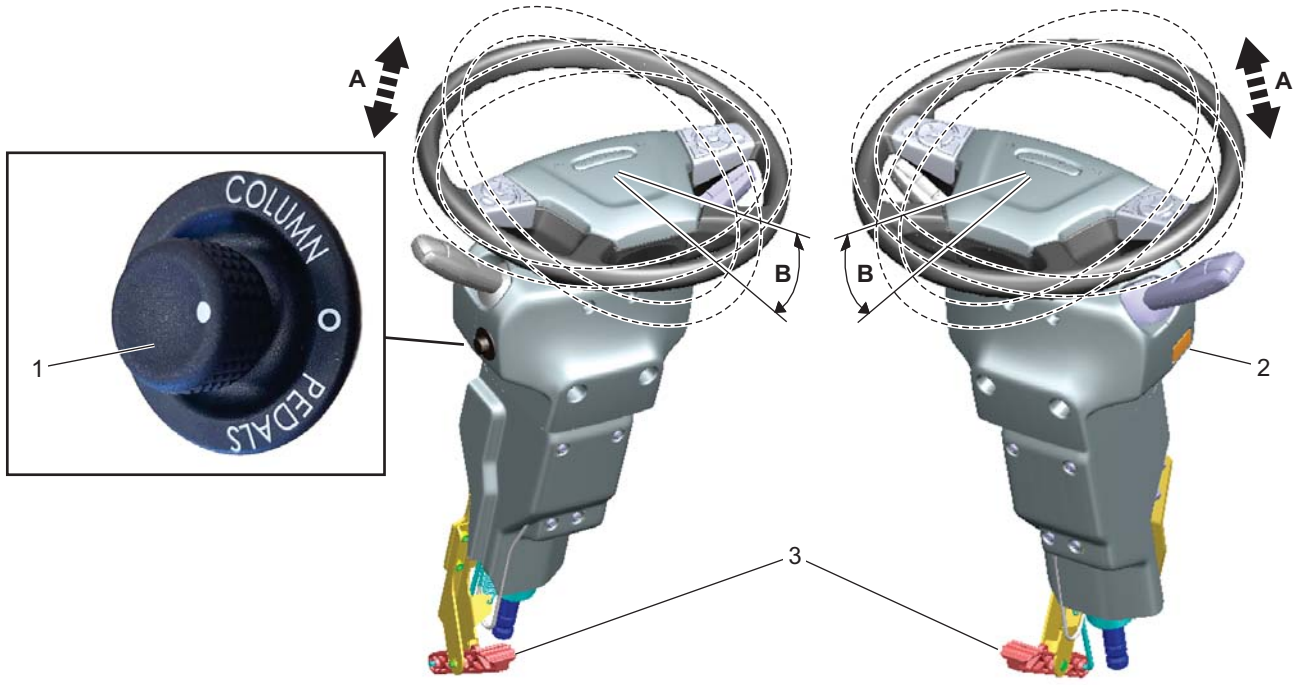

03/06/2019 f462366

Some steering columns are equipped with the toggle switch but it only adjusts the brake and throttle pedals. Use the foot pedal on these vehicles to tilt and telescope the steering wheel.

A. Telescope
B. Tilt
1. Steering Column and Pedal Toggle Switch
2. Hazard Warning Light Switch
3. Foot Pedal (standard column only)

Fig. 8.2, Tilt/Telescope Steering Column

9

Hydraulic and Air Brake Systems

Hydraulic Brake System 9.1
Air Brake System 9.2
Brake Burnishing (new vehicle) 9.3
Engine Brake 9.3

Hydraulic Brake System

General Information

The hydraulic brake system includes a power booster, master cylinder, reservoir, hydraulic brake lines, a brake rotor on each wheel hub, and a brake caliper and pad assembly at each rotor.

IMPORTANT: Make sure that the fluid level in the master cylinder reservoirs is at the bottom of the fill-neck. See **Fig. 9.1**. Use only heavy-duty brake fluid, DOT 3, in the hydraulic brake system.

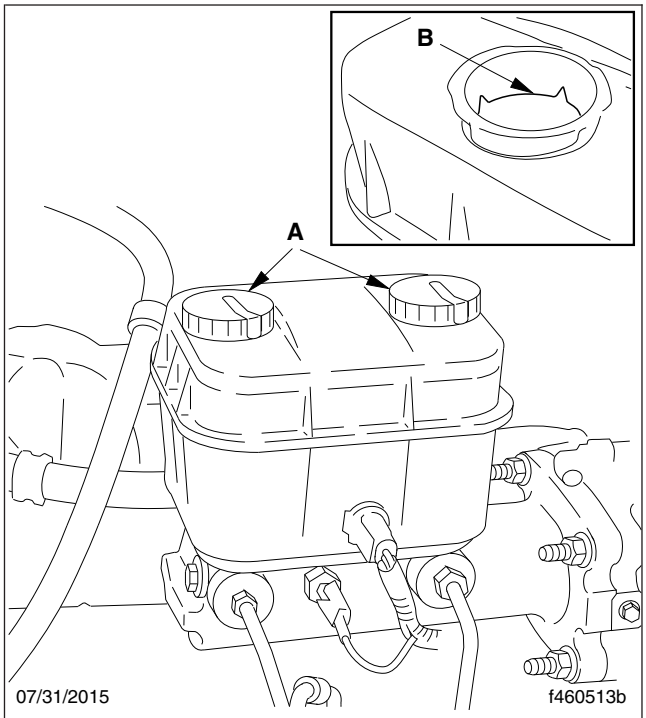

A. Open caps and check fluid level.
B. Fill to this level.

Fig. 9.1, Hydraulic Brake Reservoir (MT-45 and MT-55)

The master cylinder controls braking power to the front and rear brakes. The Bendix Hydro-Max® power booster is attached to the rear of the master cylinder and is connected to the power steering system (which provides pressurized power steering fluid). An electrically powered "reserve" pump operates if there is inadequate fluid flow from the power steering pump to the power booster. The brake system warning light comes on if there is a problem within the system. Bring the vehicle to a safe stop and correct the problem before continuing operation of the vehicle. See **Group 42** of the *Walk-In Van Chassis Workshop Manual* for hydraulic brake system troubleshooting and adjustment procedures.

Operation

Before driving the vehicle, secure all loose items in the cab so that they will not fly forward during a full brake application. Check that the brake system warning light is off after releasing the hand brake. If the warning light does not go off, correct the problem before continuing operation of the vehicle.

During normal braking stops, depress the foot brake control pedal until braking action slows down the vehicle. Increase or decrease the pressure on the pedal so that the vehicle comes to a smooth, safe stop. When the forward speed of the vehicle has decreased to almost the idling speed of the engine, push the clutch pedal in (if equipped) and shift the transmission into Neutral (N). Apply the hand parking brake if the vehicle is to be parked.

Meritor WABCO® Antilock Braking System (ABS)

The Meritor WABCO® Antilock Braking System (ABS) is an electronic wheel speed monitoring and control system that works with the hydraulic brake system. ABS passively monitors vehicle wheel speed at all times, but *controls* wheel speed during an emergency or reduced-traction stop. In normal braking applications, the standard hydraulic brake system is in effect.

IMPORTANT: For proper ABS system operation, the front and rear tires must rotate at speeds within 16% of one another. Installing different sized tires on just the front or rear axle will result in inaccurate wheel speed signals to the ECU resulting in a reduced braking force, which could lead to longer stopping distances.

ABS includes signal-generating tone wheels and sensors located in the wheel hubs of each sensed axle. The sensors transmit vehicle wheel speed information to an electronic control unit (located on the frame rail) that interprets these signals to calculate wheel speed and a vehicle reference speed. If the calculations indicate wheel lockup, the appropriate control circuit signals the brake pressure modulator to increase or decrease braking pressure until wheel slip has been corrected.

The electronic control unit also has a safety circuit that constantly monitors the wheel sensors, brake

pressure modulator, and the electrical circuitry. The dash warning light (ABS) comes on after the ignition is switched to the ON position. Once the vehicle moves faster than about 4 mph (6 km/h), the warning light goes out only if all of the vehicle's ABS components are working properly.

If during vehicle operation, the safety circuit senses a failure in any part of the ABS system (a sensor, brake pressure modulator, wiring connection, short circuit, etc.), the warning light (ABS) comes on and the control circuit where the failure occurred is switched to normal braking action. Even if the ABS system is partially or completely inoperative, normal braking ability is maintained. An exception would be if the brake pressure modulator or hydraulic fluid line is damaged. Since these components are an integral part of the hydraulic brake system, normal braking may be impaired or inoperative.

IMPORTANT: If the ABS warning light does not work as described above or comes on while driving, repair the ABS system immediately to ensure full antilock braking capability.

See the diagnostic menu screens in **Chapter 2** or **Chapter 3** as applicable, and follow the steps to read the fault codes in the instrument panel diagnostic menu.

During emergency or reduced-traction stops, fully depress the brake pedal until the vehicle comes to a safe stop; *do not pump* the brake pedal. With the brake pedal fully depressed, the ABS system will control all wheels to provide steering control and a reduced braking distance.

Air Brake System

General Information

A dual air brake system consists of two independent air brake systems that use a single set of brake controls. Each system has its own reservoir, plumbing, and brake chambers. The primary system operates the service brakes on the rear axle; the secondary system operates the service brakes on the front axle.

Before driving your vehicle, allow time for the air compressor to build up a minimum of 95 psi (655 kPa) pressure in both the primary and the secondary systems. Monitor the air pressure system by observing the dual system air pressure gauges and the low air-pressure warning light and buzzer. The warning light and buzzer shut off when the pressure in both systems reaches 65 to 73 psi (448 to 503 kPa).

The warning light and buzzer comes on if air pressure drops below 65 to 73 psi (448 to 503 kPa) in either system. If this happens, check the air system pressure gauges to determine which system has low air pressure. Although the vehicle's speed can be reduced using the foot brake control pedal, either the front or the rear service brakes will not be operating, causing a longer stopping distance. Bring the vehicle to a safe stop and have the air system repaired before continuing.

The parking brake will apply when air pressure drops below 38 to 42 psi (262 to 290 kPa). Do not wait for the brake to apply automatically; when the warning light and buzzer first come on, immediately bring the vehicle to a safe stop. Before continuing operation of the vehicle, correct the cause of the air loss.

Air Brake System With External Fill (Shrader) Valve

If your engine will not start and it is desirable to release the parking brake, do the following: Block the wheels. Turn the ignition switch to the ON position. Fill the air reservoir for the braking system by external means. The parking brake will not release until air pressure reaches 65 psi (448 kPa). The low air buzzer will sound until air pressure reaches 65 psi (448 kPa) with the ignition switch in the ON position.

IMPORTANT: If the air pressure in the braking system drops back below 38 to 42 psi (262 to 290 kPa) the parking brake will reengage.

Operation

Before driving the vehicle, secure all loose items in the cab so that they will not fly forward during a full brake application. Make sure that all occupants are wearing seat belts.

During normal braking stops, depress the foot brake control pedal until braking action slows down the vehicle. Increase or decrease the pressure on the pedal so that the vehicle comes to a smooth, safe stop. When the forward speed of the vehicle has decreased to almost the idling speed of the engine, push the clutch pedal in (if equipped) and shift the transmission into Neutral (N). Apply the hand parking brake if the vehicle is to be parked.

IMPORTANT: In the event of a total loss of service brakes with full system air pressure, use the parking brake control valve (yellow knob) to bring the vehicle to a complete stop in the safest location possible.

The yellow diamond-shaped knob on the control panel actuates the parking brake valve. Pull out the knob to apply the parking brake. See **Fig. 9.2**.

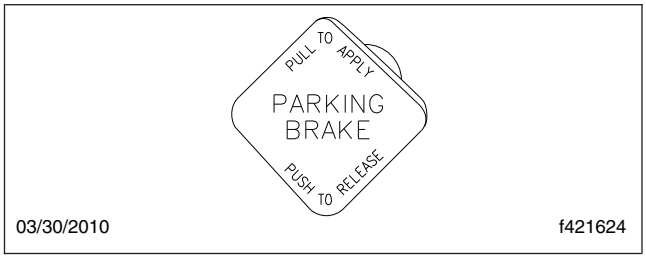

Fig. 9.2, Parking Brake Control Knob

⚠ WARNING

If the vehicle is equipped with an air suspension system, do not move the vehicle with the air suspension deflated. Doing so could result in a loss of vehicle control, possibly causing personal injury and property damage.

NOTICE

Do not use the spring brakes if the service brakes are hot, such as after descending a steep grade. Also, do not use the spring parking brakes during freezing temperatures if the service brakes are wet. To do so could damage the brakes if hot, or cause them to freeze during cold weather.

If the brakes are wet, drive the vehicle in Low (L) or First (1) gear and lightly apply the brakes to heat and dry them.

Allow hot brakes to cool before using the parking brake. Always chock the tires.

Automatic Slack Adjusters

Automatic slack adjusters should never be manually adjusted except during routine maintenance of the foundation brakes (e.g., replacing shoes), during slack adjuster installation, or in an emergency situation.

When the brake pushrod stroke exceeds the legal brake adjustment limit on a vehicle, there is likely a mechanical problem with the foundation brake components or the adjuster is improperly installed.

Visit a repair facility as soon as possible when brakes equipped with automatic slack adjusters are determined to be out of adjustment.

NOTICE

Manually adjusting an automatic slack adjuster to bring the pushrod stroke within legal limits is likely masking a mechanical problem. Adjustment is not repairing. In fact, continual adjustment of automatic slack adjusters may result in premature wear of the adjuster itself. Further, the improper adjustment of some automatic slack adjusters may cause internal damage to the adjuster, thereby preventing it from properly functioning.

Brake Burnishing (new vehicle)

IMPORTANT: Check the brake system and ensure that it is in proper operating condition before attempting the brake burnishing procedure.

1. In a safe area, make 10 sharp brake applications or "snubs," slowing the vehicle from 40 to 20 mph (64 to 32 km/h) using light (approximately 10 to 20 psi [69 to 138 kPa]) brake pressure.
2. Make 10 stops from 20 mph (32 km/h) using moderate (20 to 30 psi [138 to 207 kPa]) brake pressure.
3. Make 2 stops from 20 mph (32 km/h) using hard (full application of air pressure) brake applications.

NOTE: After the hard brake applications, it is normal to notice a hot brake odor.

4. Drive the vehicle 5 to 7 miles (8 to 11 km) allowing the brakes to cool, and then come to a stop.

NOTE: After performing the burnishing procedure, there should be no brake noise and the brakes should have good stopping ability.

5. If the brakes pull the vehicle to one side or grab after the burnishing procedure, contact a Freightliner dealer for assistance.

Engine Brake

Each engine manufacturer uses a specific engine brake for their engine. Regardless of the manufacturer, the engine brake is operated with the principles outlined here. Refer to the engine manufacturer's operation manual for details of their particular engine brake product.

⚠ WARNING

To avoid injury from loss of vehicle control, do not activate the engine brake system under the following conditions:

- **on wet or slippery pavement, unless the vehicle is equipped with antilock braking system (ABS) and you have had prior experience driving under these conditions;**
- **if the drive wheels begin to lock, or there is fishtail motion after the engine brake is activated.**

NOTE: When the engine brake is enabled, the engine brake lamp illuminates in the instrument panel.

Whenever vehicle braking is required on good road conditions, the engine brake may be used in conjunction with the service brakes. There is no time limit for operation of the engine brake. However, an engine brake does not provide the precise control of, and is not a substitute for, service brakes.

⚠ WARNING

Usage of the engine brake as the primary braking system can cause unpredictable stopping distances, that could result in personal injury or property damage. Service brakes are the primary vehicle braking system.

Since the engine brake is most effective at rated engine speed, gear selection is very important. Gearing down the vehicle within the limits of the rated engine speed makes the engine brake more effective.

"Control speed" is the speed at which the engine brake performs 100 percent of the required downhill braking, resulting in a constant speed of descent. The control speed varies, depending on vehicle weight and the downhill grade.

For faster descent, select a higher gear than that used for control speed. Service brakes must then be used intermittently to prevent engine overspeed and to maintain desired vehicle speed.

For slower descent, select a lower gear, being careful not to overspeed the engine. Occasional deactivation of the engine brake may be necessary to maintain the designated road speed under these conditions.

If the engine is equipped with both cruise control and an engine brake, the engine brake can operate automatically while cruise control is activated. The maximum amount of braking is selected with the engine brake control. When the vehicle returns to the set cruise speed, the engine brake will turn off.

The engine brake will only operate when the accelerator pedal is fully released.

Vehicles equipped with ABS have the ability to turn the engine brake off if wheel slip is detected. The engine brake will automatically turn back on once wheel slip is no longer detected.

Engine Brake Operation

NOTICE

Do not allow the engine to exceed its governed speed, or serious engine damage could result.

NOTE: Depending on the brake type, the engine brake may be disabled when engine temperature falls below a set level.

IMPORTANT: On some vehicles, the engine brake only has off and high intensity options.

The engine brake control is located on the right-hand steering column lever. At the top position, the engine brake is off, and at the three lower positions, the engine brake is on and the intensity (low, medium, high) increases with each step down. See **Fig. 9.3**.

NOTE: The cruise control system and safety systems may activate the engine brake regardless of the lever position.

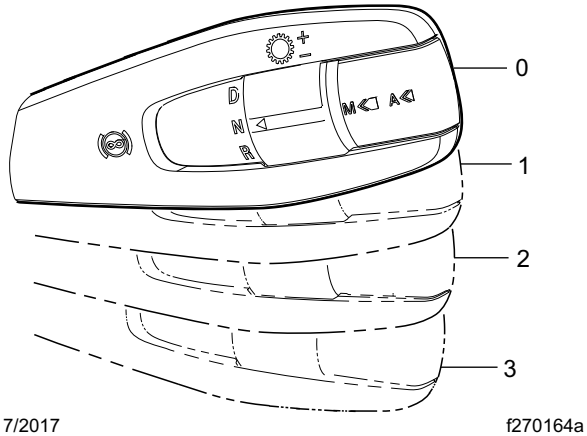

02/17/2017 f270164a

On some vehicles, the engine brake only has off and high intensity options.

0. Off
1. Low
2. Medium
3. High

Fig. 9.3, Engine Brake Positions, Right-Hand Steering Column Lever

10

Compressed Natural Gas Fuel System

CNG General Information 10.1
CNG Fuel Tank Filling Procedure 10.1
Engine Starting 10.2
CNG Safety Precautions 10.3

Compressed Natural Gas Fuel System

CNG General Information

Natural gas is a mixture of hydrocarbon gasses with a high concentration of methane gas, which burns completely into carbon dioxide and water, resulting in lower emissions than with diesel or gasoline.

Natural gas is less energy dense than diesel, therefore, a larger volume of natural gas is required to produce the same power. This is one reason for the slightly lower maximum power in natural-gas-powered vehicles. The power difference is a reduction in maximum power only and does not affect normal driving. The power reduction is evidenced only in wide-open throttle, high-torque conditions.

IMPORTANT: The natural gas fuel system should be routinely inspected for gas leakage. Use a natural gas detector to check the fuel tanks, fuel filtering and regulating mechanisms, and the fuel lines. If necessary, replace leaking fuel tanks; repair or replace any lines, devices, or connections that are leaking.

Natural gas is nontoxic, but it can cause asphyxiation in certain circumstances. Commercial compressed natural gas normally contains an odor-producing chemical, which enables users to detect gas leaks, but a natural gas detector is recommended for checking for leaks.

A typical natural gas fuel system consists of:

- Fuel supply containers or tanks storing the gas at high pressure.
- A pressure relief valve and manual shutoff valves.
- A filling connection with a check valve to prevent the gas from flowing back out of the connection.
- A valve that automatically closes if the engine stops.
- A high-pressure fuel filter and a low-pressure fuel filter.
- A pressure regulator to reduce the fuel tank pressure to the lower pressure needed for the engine.
- A gas-air mixer to produce a flammable mixture for the engine.
- A pressure gauge to indicate the fuel supply in the tanks.

CNG Fuel Tank Filling Procedure

CNG is moved from the fuel station storage tanks to the vehicle cylinders through a metered dispenser. During fueling, as pressure inside of the vehicle cylinders increases, so does the temperature. The dispenser shuts off when it determines the CNG cylinders are full.

CNG fuel cylinders cannot be filled to their full capacity of 3600 psi (24 821 kPa) in cooler weather. Since temperature change causes gas to expand and contract, less pressure in the cylinders on a cold day is equal to the same amount of gas at a higher pressure on a warm day. The fuel station dispenser has a temperature-pressure compensating device, which accounts for ambient temperature during fueling. See **Table 10.1** for approximate full cylinder pressures at various temperatures.

CNG Temperature/Pressure Compensation Values		
Temperature: °F (°C)	Fill Station Pressure Set Point	
	3000 psi (20 684 kPa) Set Point	3600 psi (24 821 kPa) Set Point
100 (37.8)	3415 (23 546)	4086 (28 172)
90 (32.2)	3276 (22 587)	3909 (26 952)
80 (26.7)	3138 (21 636)	3754 (25 883)
70 (21.1)	3000 (20 684)	3600 (24 821)
60 (15.6)	2861 (19 726)	3445 (23 752)
50 (10)	2723 (18 774)	3288 (22 670)
40 (4.4)	2584 (17 816)	3131 (21 587)
30 (-1.1)	2446 (16 865)	2973 (20 498)
20 (-6.7)	2307 (15 906)	2814 (19 402)
10 (-12.2)	2169 (14 955)	2655 (18 306)
0 (-17.8)	2031 (14 003)	2495 (17 202)
-10 (-23.3)	1893 (13 052)	2336 (16 106)
-20 (-28.9)	1755 (12 100)	2180 (15 031)
-30 (34.4)	1616 (11 142)	2024 (13 955)
-40 (-40)	1477 (10 184)	1868 (12 879)

Table 10.1, CNG Temperature/Pressure Compensation Values

Use the following steps to fuel a CNG vehicle.

1. Shut down the engine and apply the parking brake.

IMPORTANT: Close all windows and doors during the fueling process. Keeping windows and doors closed allows for easier leak detection inside the cab after fueling.

⚠ WARNING

Natural gas fuel tanks, lines, and valves are always pressurized. Always observe safety precautions. Failure to do so could lead to loss of control over a filling hose or to ignition of the natural gas, which could cause severe property damage, serious bodily injury, or death.

2. Ensure all fuel cylinder shutoff valves are open.
3. Ensure the vehicle fuel system main shutoff valve is open.
4. Open the CNG fuel panel access door and remove the dust cap from the vehicle fuel fill port.
5. Ensure the O-ring is present inside the fuel fill port. If the O-ring has been dislodged or is missing, the station dispensing nozzle will not connect securely to the fill port.
6. Turn the selector knob on the service pump to the VENT position, if equipped.
7. Connect the quick coupling on the dispensing nozzle securely to the vehicle fuel fill port.
8. Turn the selector knob on the service pump to the FILL position, if equipped.

IMPORTANT: If at any time the service pump or vehicle begins to vent CNG uncontrollably, notify a station attendant or activate the service station emergency shut-off switch to cease the flow of CNG.

9. Switch on the service pump. A slight hissing noise may be heard as the fuel cylinders fill.
10. Watch the pressure gauge on the service pump. When the gauge reads approximately 3600 psi (24 821 kPa), or when the fill pressure stops climbing, the CNG cylinders are full. The service pump will shut itself down automatically. See **Table 10.1** for pressure compensation values based on ambient temperatures.
11. Move the selector knob on the service pump to the VENT position, if equipped. A short hiss will be heard as a small amount of natural gas is vented into the hose.

⚠ WARNING

Do not attempt to remove the fill station nozzle from the tank fill fitting until venting of pressure is noted. If no venting occurs, ask for assistance from the station attendant. Removing an unvented coupling could result in an uncontrolled hose, which could lead to property damage or personal injury.

12. Remove the station dispensing nozzle from the vehicle fill port.
13. Install the dust cap on the vehicle fuel fill port and close the fuel panel access door.

Engine Starting

1. Set the parking brake.
2. Move the fuel shut-off valve handle to the RUN position.

NOTICE

Protect the turbocharger during engine start-up by not opening the throttle or accelerating the engine above 1000 rpm until normal engine idle oil pressure registers on the gauge.

3. For automatic transmissions, make sure that the transmission shift control is in Neutral (N), Park (P), or the Park Brake (PB) position.
4. Turn the ignition switch to the START position. See **Fig. 10.1** for the four-position ignition switch and **Fig. 10.2** for the three-position ignition switch. After the engine starts, release the key.

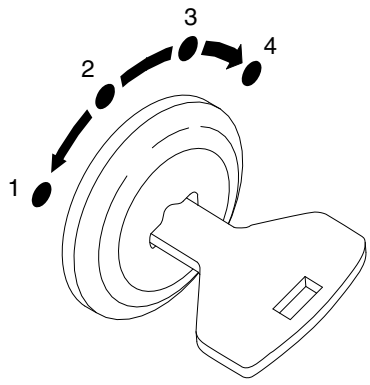

07/10/96 f601179

1. Accessory (optional)
2. Off
3. On
4. Start

Fig. 10.1, Four-Position Ignition Switch

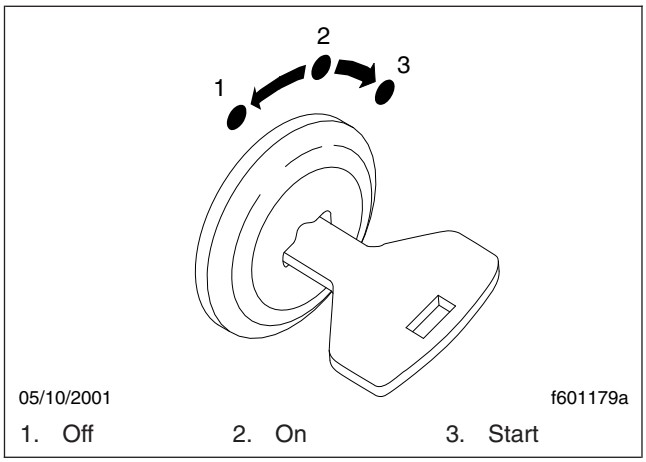

Fig. 10.2, Three-Position Ignition Switch

NOTICE

Do not crank the engine for more than 30 seconds at a time during any of the following procedures. Wait two minutes after each try to allow the starter to cool. Failure to do so could cause starter damage.

5. Bring the engine up to operating speed gradually as it warms up and develops stable oil pressure.

IMPORTANT: When the engine is started, it takes a short time to build up a lubricating oil film between the shafts and bearings, and between the pistons and cylinder walls. The oil pressure gauge indicates any drop in lubricating oil pressure within 15 seconds of engine startup. See the *Cummins Operation and Maintenance Manual* for minimum idle oil pressure specifications.

CNG Safety Precautions

⚠ DANGER

Natural gas is highly flammable. Failure to observe the following safety precautions could lead to the ignition of the natural gas, which could cause serious bodily injury or death.

CNG General Safety Information

Since compressed natural gas is highly flammable, if you should smell gas, immediately shut off all engines and ignition sources. Avoid causing sparks, and stay away from arcing switches and equipment. Extinguish any cigarettes, pilot lights, flames, or other sources of ignition in the area and adjacent areas. Immediately provide extra ventilation to the area. Do not start the engine or any other type of equipment until the gas leak is corrected and the area cleared of natural gas.

Natural gas is odorless before a scent is added for safety. Natural gas is also colorless and nontoxic. Still, at high enough concentration, natural gas can suffocate a person simply by excluding adequate oxygen to sustain life.

Natural gas is flammable in concentrations ranging from 4 percent to 16 percent by volume in air.

⚠ WARNING

When bleeding the dispensing hose after filling the tank, the handle gets extremely cold. This may freeze the hands if appropriate safety gloves are not used.

When filling the vehicle tanks with compressed natural gas (CNG), vent the dispensing hose before disconnecting it from the vehicle. The pressure in the hose may cause a disconnected hose to become uncontrollable.

CNG storage tanks have a limited usable life-span, due to the high pressures that they must sustain. Periodic inspections are required by law to ensure continued safety in their use.

If a tank receives an impact or has deep scratches or gouges, it should be inspected before refilling.

CNG Workshop Precautions

Because natural gas is less dense than air, it rises. The shop ceiling needs to be equipped with a vent system that will allow the gas to escape and dissipate.

Use only safety fluorescent extension shop lights. Ordinary light bulbs can explode if dropped, possibly causing a fire.

The shop must be equipped with an alarm system that activates when gas concentration in the air becomes dangerous.

Fire extinguishers should be the CO_2 type (ABC minimum) and should be strategically located, highly visible, and easily accessed.

Permit no smoking or other ignition sources in the shop area.

Servicing the CNG System

Observe the following safety precautions when servicing natural-gas-powered vehicles:

- Before making non-CNG system repairs on a CNG vehicle, close the shutoff valve at the outlet of the CNG container, and keep it closed throughout the repair procedure. Have the CNG system checked by a qualified technician before reopening the fuel shutoff valve.
- Allow only qualified technicians trained in automotive CNG system repair to perform repairs.
- Close the fuel shutoff valve(s) before performing maintenance and repairs, and when storing the vehicle inside. Open the valve(s) only if natural gas is needed to operate the engine or to check for leaks.
- Vent the gas outdoors to a safe location.
- Always use a natural gas detector to test the system for leaks, whether an odor is present or not. Commercial compressed natural gas normally contains an odor-producing chemical to enable users to detect leaks by smell. But because the odor-producing chemical can fade, a leak detector is necessary.
- Routinely inspect the fuel tanks, the fuel filtering and regulating mechanisms, and the fuel lines. Use a natural gas detector to check for any leaks. A soap-and-water solution can be used to pinpoint the exact location of leaks. Replace leaking fuel tanks; repair or replace any lines, devices, or connections that are leaking.
- Always tighten fasteners and fuel connections to the required torque specification, since overtightening or undertightening could cause gas leakage. Tightening to the correct torque specification is critical to the system.

Major Repair and Replacement of CNG Parts

When a vehicle is involved in an accident or a fire causing damage to the fuel tank, the fuel tank must be replaced. If damage occurred to other parts of the fuel system, also replace those parts.

Any and all replacement parts (valves, fittings, tubing, etc.) of the CNG fuel system must be designed specifically for CNG automotive use and must be officially approved and rated for the pressures and conditions that pertain.

Install parts and components in accordance with the manufacturer's instructions.

Replace (do not repair) damaged fuel lines. When replacing fuel lines, install the lines securely in a protected location, or shield them from heat sources and from contact with unsecured objects. Before assembly, apply a natural gas-impervious pipe thread jointing material to all male pipe threads. Ensure that all lines and fittings are clear and free of cuttings, threading burrs, and scales, and that the ends of all lines are reamed. Protect lines passing through a panel by means of grommets or similar devices. Locate joints and connections so that they are accessible.

Do not use aluminum or copper pipe, tubing, or fittings between the fuel tank and the first-stage pressure regulator because of the high pressure involved.

Ensure that shutoff valves have a rated service pressure not less than the rated service pressure of the entire fuel supply system, and that they are capable of withstanding a hydrostatic test of at least four times the rated service pressure.

11

Pre- and Post-Trip Checklists

Pretrip and Post-Trip Inspection General Information 11.1
Daily Pretrip Inspection and Maintenance Checklist 11.2
Weekly Post-Trip Inspection and Maintenance Checklist 11.3
Monthly Post-Trip Inspection and Maintenance Checklist 11.3

Pretrip and Post-Trip Inspection General Information

Regulations in both Canada and the United States clearly indicate that it is the driver's responsibility to perform an inspection and ensure the complete roadworthiness of a vehicle, before placing it into service for the day. Commercial vehicles may be subject to inspection by authorized inspectors, and an unsafe vehicle can be put "out of service" until the driver or owner repairs it.

Use the pretrip inspection checklist to ensure that vehicle components are in good working condition before each trip. Use the weekly and monthly post-trip inspection checklists to note any items that require attention before the next trip. A driver that is familiar with the vehicle, and drives it regularly, can perform the daily inspections, then add the weekly and monthly post-trip inspections as scheduled. If the driver does not operate the vehicle on a consistent basis, all three of the inspection procedures should be performed before the trip.

Pretrip and post-trip inspections cannot be done quickly. However, careful inspections save time by eliminating stops later to adjust items overlooked or forgotten.

Numbers in parentheses within each of the checklists reference the corresponding detailed instructions found under "Daily (D), Weekly (W), or Monthly (M) Procedures in **Chapter 12**.

If any system or component does not pass this inspection, it must be corrected before operating the vehicle. Whenever equipment requires adjustment, replacement, repair, addition of lubricants, or a change of lubricants, see the *Walk-In Van Chassis Workshop Manual* for procedures and specifications, or take the vehicle to an authorized Freightliner dealer.

IMPORTANT: The pretrip and post-trip checklists in this chapter, and the maintenance procedures detailed in **Chapter 12** and in the *Walk-In Van Chassis Maintenance Manual* are **not all inclusive**. Also, refer to the inspection and maintenance instructions of the major component manufacturers and the body manufacturer.

Daily Pretrip Inspection and Maintenance Checklist

IMPORTANT: Before performing any checks, apply the parking brake and chock the tires.

See **Table 11.1** for a checklist of the procedures that should be performed daily, before the first trip.

Procedure Performed (check off)	Daily Pretrip Inspections/Checks	Procedure Reference
_____	Drain manually drained air reservoirs (that are not equipped with automatic drain valves)	D1
Check _____	surge tank coolant level	D2
Inspect _____	radiator and charge air cooler	D3
Check _____	engine for fuel, oil, or coolant leaks	D4
Check _____	CNG engines for natural gas leaks, using a natural gas detector	D4
Check _____	intake-air restriction indicator and air intake system	D5
Check _____	engine oil level	D6
Check _____	automatic transmission fluid level, if equipped	D7
Check _____	fuel/water separator for contaminants and leaks, if equipped	D8
Check _____	fuel tank(s), fuel lines, and connections	D9
Check _____	fuel level	D10
Check _____	diesel engine fuel cap vent area is clean	D10
Check _____	CNG engine pressure gauge mounted in fuel fill box	D10
Check _____	front and rear suspension components	D11
Check _____	oil- and air-pressure warning systems	D12
Check _____	horn	D13
Check _____	backup alarm, if equipped	–
Check _____	headlights, mirrors, and window glass	D14
Check _____	air brake chambers and pushrods	D15
Check _____	slack adjusters	D16
Check _____	tire pressure	D17
Check _____	tire condition	D18
Check _____	rims and wheels	D19
Check _____	air brake system	D20
Check _____	parking brakes	D21
Inspect _____	frame rails (missing bolts), crossmembers (bent or loose)	–
Check _____	mud flaps (aren't damaged, at least 10 inches above the ground, and brackets are secure)	–
Check _____	exhaust system (mounted securely, connected tightly, no signs of leaks such as soot trails)	–
Check _____	Bendix Hydro-Max® brake booster	D22
Inspect _____	engine and chassis wiring	D23
_____	remove chocks and test service brakes	D24
Inspector_____ Date _____		

Table 11.1, Daily Pretrip Inspection and Maintenance Checklist

Weekly Post-Trip Inspection and Maintenance Checklist

See **Table 11.2** for a checklist of the procedures that should be performed weekly, post-trip.

IMPORTANT: Before performing any checks, apply the parking brake and chock the tires.

Procedure Performed (check off)	Weekly Post-Trip Inspections/Checks	Procedure Reference
_____	Manually drain air reservoirs that are equipped with automatic drain valves	—
Inspect _____	batteries and battery cables	W1
Check _____	wheel bearing lubricant level	W2
Inspect _____	steering components	W3
Check _____	drive belts	W4
Check _____	drive belt tension	W5
Inspect _____	seat belts and tether belts	—
Inspector_____ Date _____		

Table 11.2, Weekly Post-Trip Inspection and Maintenance Checklist

Monthly Post-Trip Inspection and Maintenance Checklist

See **Table 11.3** for a checklist of the procedures that should be performed monthly, post-trip.

IMPORTANT: Before performing any checks, apply the parking brake and chock the tires.

Procedure Performed (check off)	Monthly Post-Trip Inspections/Checks	Procedure Reference
_____	Clean the battery terminals	M1
Inspect _____	radiator hoses and heater hoses	M2
Check _____	fluid level in the hydraulic clutch reservoir (if applicable, and if necessary, fill with DOT 6 brake fluid)	—
Check _____	fluid level in the hydraulic brake fluid reservoir, if equipped	M3
Check _____	steering wheel play	M4
Check _____	outer surfaces of the hood and body (for visible surface breaks and damage)	—
Inspect _____	brake lining wear	M5
Inspect _____	driveshaft	—
Inspector_____ Date _____		

Table 11.3, Monthly Post-Trip Inspection and Maintenance Checklist

12

Pre- and Post-Trip Inspections and Maintenance

Safety Precautions 12.1
Daily Pretrip Inspection and Maintenance Procedures 12.1
Weekly Post-Trip Inspection and Maintenance Procedures 12.9
Monthly Post-Trip Inspection and Maintenance Procedures 12.10

Safety Precautions

⚠ DANGER

When working on the vehicle, shut down the engine, set the parking brake,and chock the tires. before working under the vehicle, always place jack stands under the frame rails to ensure the vehicle can not drop. Failure to follow these steps could result in serious personal injury or death.

Daily Pretrip Inspection and Maintenance Procedures

Whenever equipment requires adjustment, replacement, repair, addition of lubricants, or a change of lubricants, see the *Walk-In Van Chassis Workshop Manual* for repair procedures and specifications. Specific references to the manual will be found where appropriate.

1. Drain manually drained air reservoirs (that are not equipped with automatic drain valves).

   Water and oil normally enter the air reservoir in the form of vapor because of the heat generated during compression. After the water and oil condense, drain the resulting emulsion as follows:

   1.1 Open the wet tank valve. The drain cock or pull chain drain is located on the forward end of the supply air reservoir, which is connected directly to the air compressor. Block the valve open.

⚠ WARNING

When draining the air reservoir, do not look into the air jets or direct them toward anyone. Dirt or sludge particles may be in the airstream and could cause injury.

   1.2 Exhaust the remaining air and moisture from the system by opening the drain cocks on the bottoms of the remaining air reservoirs. Block the valves open.

   1.3 Water and oil emulsion often form pockets that will not drain while compressed air is in the reservoirs. Because of these pockets, leave the valves blocked open during the first part of the pretrip inspection.

2. Check the coolant level in the surge tank.

   See **Fig. 12.1**. If the coolant is low, add a 50/50 mixture of water and antifreeze. Refer to the engine manufacturer's service literature for approved coolants. Fill the surge tank with coolant to the MAX line when the tank is cool. If the surge tank was empty, start the engine after refilling, then check the level again when the engine is at operating temperature.

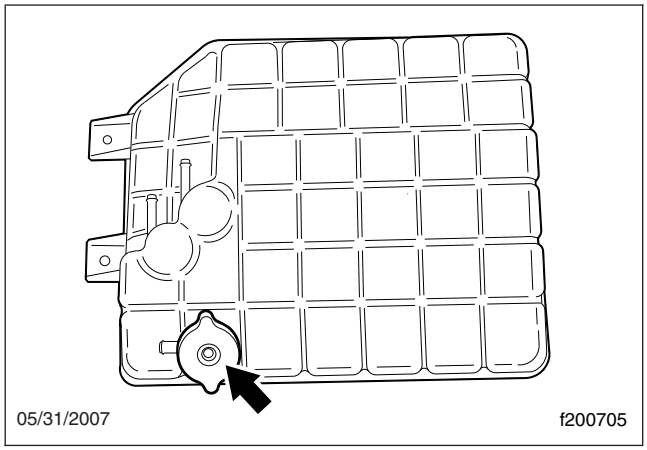

Fig. 12.1, Surge Tank Fill Cap

NOTICE

Coolant must be filled to the full line of the surge tank. Low coolant could result in engine overheating, which could cause engine damage.

3. Inspect the radiator and charge air cooler.

   3.1 Inspect the radiator and charge air cooler for clogged fins. Use compressed air or water directed from the fan side of the core to backflush any material restricting airflow.

   3.2 Inspect the radiator and charge air cooler for damage and accumulated debris. Straighten bent or damaged fins to permit airflow across all areas of the cores.

   NOTE: When traveling through areas of high insect concentration, it may be necessary to clean the exterior of the radiator or the charge air cooler core as often as every 200 miles (320 km).

   3.3 Also inspect and clean the condenser. If clogged, the condenser can restrict airflow through the radiator.

3.4 Check the radiator for leaks. If leaks are found, have the radiator repaired or replaced. Take the vehicle to an authorized Freightliner dealer for assistance.

4. *Inspect the engine for fuel, oil, and coolant leaks. On vehicles equipped with a compressed natural gas (CNG) engine, use a natural gas detector to check for natural gas leaks.*

   Correct any leaks found.

5. *Inspect the air intake system for leaks or damage.*

NOTICE

Failure to maintain a sealed air intake system could allow entry of dirt and contaminants into the engine. This could adversely affect engine performance and result in engine damage.

5.1 Check the intake-air restriction indicator, if so equipped.

5.2 Replace the primary filter element in the air cleaner when filter restriction reaches 25 inH_2O for Cummins engines or 15 inH_2O for GM engines. See **Group 09**of the *Walk-In Van Chassis Workshop Manual* for filter element replacement instructions, or take the vehicle to an authorized Freightliner dealer. See **Fig. 12.2** and **Fig. 12.3**.

NOTE: After replacing the filter element, reset the restriction indicator by pressing the rubber reset button, if so equipped.

5.3 Inspect the secondary or safety filter element in the air cleaner when replacing the primary element, and replace it when clogged or dirty. This element should be replaced with every third primary element replacement.

5.4 Check the engine air intake piping from the air cleaner to the engine intake. Inspect the piping for loose connections, cracks, torn or collapsed hoses, punctures, and other damage. Tighten loose connections, and have damaged components replaced. Make sure the piping system is airtight so that all intake air passes through the air cleaner.

6. *Check the engine oil level.*

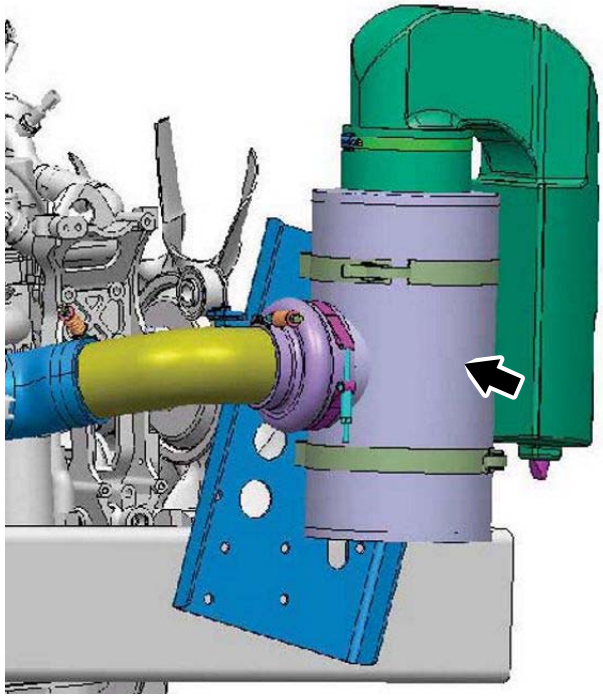

09/09/2014 f090509

To replace the filter, the canister must be replaced.

Fig. 12.2, Farr Air Cleaner Filter Element

NOTICE

Operating the engine with the oil level below the minimum fill (or "add") mark or above the maximum fill (or "full") mark could result in engine damage.

6.1 Park the vehicle on a level surface. Allow several minutes for the oil to drain back into the oil pan to ensure an accurate reading.

NOTE: Follow the engine manufacturer's guidelines for engine shutdown time requirements prior to checking the oil level.

6.2 Pull out the dipstick and clean it with a paper towel or cloth, then push the dipstick back in all the way. Remove it again, keeping the tip down, and check the oil level.

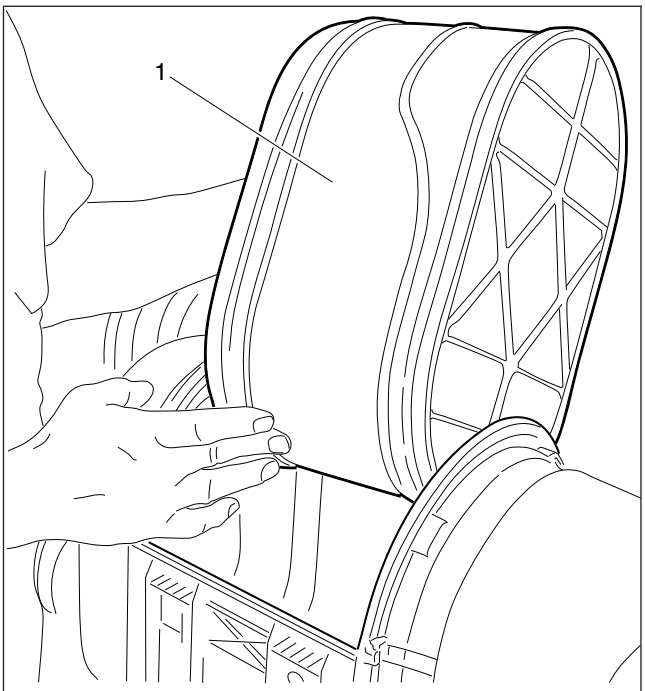

1. Primary Filter Element

Fig. 12.3, Donaldson Air Cleaner Filter Element

6.3 If the oil is below the cross-hatched area, or the add mark, at the tip of the dipstick, add at least one quart (liter) of the recommended oil. See **Fig. 12.4** for diesel engines and **Fig. 12.5** for gasoline and liquid propane gas (LPG) engines.

For diesel engines that comply with EPA07 or newer regulations, use CJ-4 engine oil with less than 1% sulfated ash.

For gasoline and LPG engines, use SAE 5W–30 oil that meets GM standard GM6094M and has the American Petroleum Institute (API) symbol. **Do not use** SAE 10W–40 or 20W–50.

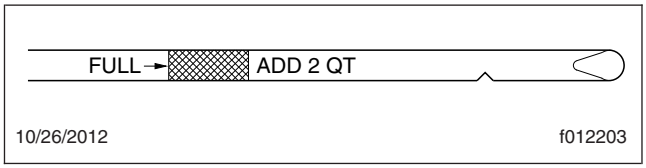

Fig. 12.4, Oil Dipstick (diesel engine)

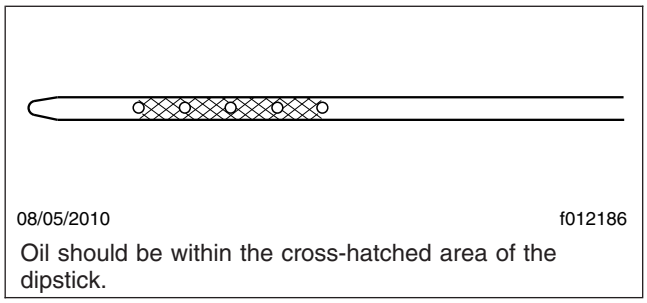

Oil should be within the cross-hatched area of the dipstick.

Fig. 12.5, Oil Dipstick (gasoline and propane engines)

NOTICE

Failure to use the recommended oil can result in engine or aftertreatment component damage and will void the warranty.

7. *Check the oil level in the automatic transmission.*

NOTE: The fluid must be warm to ensure an accurate check. The fluid level rises as temperature increases.

With the vehicle on a level surface, check the oil level in the transmission using one of the following procedures:

Hot Check

- Operate the transmission in a Drive (D) range until normal operating temperature, 160 to 200°F (71 to 93°C), is reached.
- Park the vehicle. Shift to Neutral (N) and apply the parking brake. Let the engine run at idle.
- Wipe the dipstick clean and check the fluid level. A safe operating level is any level within the HOT-run (upper) band on the dipstick. See **Fig. 12.6**.
- If the fluid is not within this range, add or drain fluid as needed to bring the level to the top of the HOT-run band. See the *Walk-In Van Chassis Maintenance Manual* for fluid types and capacities.

IMPORTANT: Do not drain the fuel/water separator completely. Drain no more than three tablespoons of fluid at a time.

8. *Check the fuel/water separator for contaminants and leaks.*

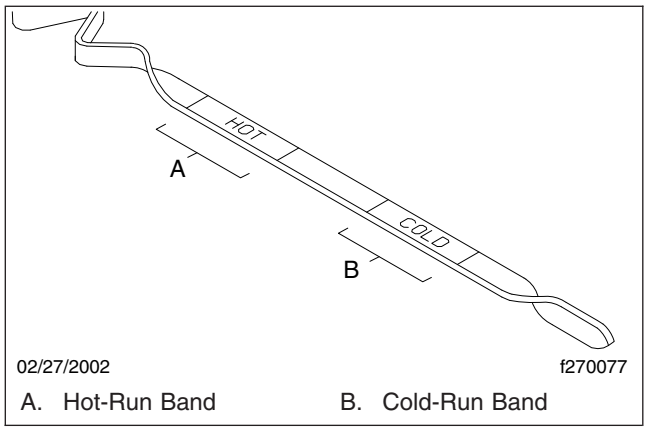

A. Hot-Run Band B. Cold-Run Band

Fig. 12.6, Automatic Transmission Dipstick Markings

IMPORTANT: When draining fluid from a fuel/water separator, drain the fluid into an appropriate container and dispose of it properly. Many states now issue fines for draining fuel/water separators on the ground. On all types of separators, stop draining fluid when you see fuel come out of the separator drain valve.

9. *Inspect the fuel tanks, fuel lines, and connections for leaks.*

   On vehicles equipped with a compressed natural gas (CNG) engine, inspect the fuel tanks, fuel regulators, fuel filters, and the fuel lines. Use a natural gas detector to check for any leaks, or spray the components with a soap-and-water solution and check for bubbles.

   9.1 Check that the fuel tanks are secured to their mounting brackets and that the mounting brackets are secured to the frame.

   9.2 Replace leaking fuel tanks.

   9.3 If lines or connections are leaking, have them repaired or replaced.

   For repair and/or replacement procedures, see **Group 47** of the *Walk-In Van Chassis Workshop Manual*, or take the vehicle in to an authorized Freightliner dealer.

   9.4 If equipped with fuel tank shutoff valves, be sure the valves are fully open.

⚠ WARNING

Never operate the engine with the fuel tank shutoff valves partly closed. This could damage the fuel pump, causing sudden loss of engine power, possibly resulting in serious personal injury due to reduced vehicle control.

10. *Check the fuel level in the fuel tank(s).*

    On vehicles equipped with a diesel engine be sure that the fuel cap vent area is clean. Check the fuel/water separator (if so equipped) for leaks and, if needed, prime the fuel tank system.

    On vehicles equipped with a compressed natural gas (CNG) engine, check the pressure gauge mounted in the fuel fill box to determine the amount of fuel in the fuel tanks.

⚠ WARNING

Never fill fuel tanks to more than 95 percent of their liquid capacity. This could make them more likely to rupture from impact, possibly causing fire and resulting in serious personal injury or death by burning.

IMPORTANT: Use only ultralow-sulfur diesel (ULSD) fuel with 15 ppm sulfur content or less, based on ASTM D2622 test procedure. Failure to use ultralow-sulfur diesel fuels may void the warranty on emissions components.

10.1 To keep condensation to a minimum, fill diesel fuel tanks at the end of each day, but not to more than 95 percent of liquid capacity. Select the proper grade of fuel, as specified by the engine manufacturer.

⚠ WARNING

Do not mix gasoline or alcohol with diesel fuel. This mixture could cause an explosion, possibly resulting in serious personal injury or death. Do not fill the fuel tanks in the presence of sparks, open flames, or intense heat. These could ignite the fuel, possibly causing severe burns.

10.2 Always strain or filter diesel fuel before putting it into the tanks. This will lengthen the life of the engine fuel filter and reduce the chances of dirt entering the engine.

11. *Inspect the front and rear suspension components, including springs, spring hangers, shocks, and suspension brackets.*

11.1 Check for broken spring leaves, loose U-bolts, cracks in the suspension brackets, and loose fasteners in the spring hangers and shackles.

11.2 Inspect the shock absorbers for loose fasteners and leaks.

11.3 Tighten all loose fasteners and have any components replaced that are worn, cracked, or otherwise damaged.

11.4 On vehicles with air suspensions, check for leaks. Check air suspension components for cuts and bulges.

⚠ WARNING

Do not replace individual leaves of a damaged front or rear suspension leaf spring assembly; replace the complete spring assembly. Visible damage, such as cracks or breaks, to one leaf causes hidden damage to other leaves. Replacement of only the visibly damaged part(s) is no assurance that the spring is safe. If cracks or breaks exist on front spring assemblies in either of the two top leaves, a loss of vehicle control could occur. Failure to replace a damaged spring assembly could cause an accident resulting in serious personal injury or property damage.

12. *Check the oil- and air-pressure warning systems.*

When the engine is started, oil- and air-pressure warnings will come on until the oil and air pressure rise above a preset minimum. After starting the engine, make sure the oil- and air-pressure warning systems are operating and that the buzzer stops sounding when the preset minimum is reached.

12.1 If the warning systems do not come on when the ignition is turned on, have the systems repaired.

12.2 If the air pressure in both systems is above the preset minimum when the engine is started, test the low air pressure system by lowering the pressure to below this range, or until the warning system comes on.

NOTE: The air pressure in both the primary and secondary air reservoir systems must be above 65 psi (448 kPa) on most vehicles.

13. *Make sure that the electric horn works.*

If a horn is not working, have it replaced before trip departure.

14. *Make sure all the exterior lights are working.* Check the high and low beams of the headlights. Clean the windshield, side, and rear windows (if equipped) with a long-handled or telescoping window cleaning device and standard cleaning solutions. Stand only on the ground, on a step-ladder, or an elevated walkway. The vehicle entry/exit steps and handholds are not designed for this purpose. The tires, fenders, engine, and other under-hood components do not have adequate gripping surfaces and handholds.

⚠ DANGER

Do not loosen or remove the parking brake clamp ring for any purpose. See Fig. 12.7. The parking/emergency brake section of the brake chamber is not intended to be serviced. Serious injury or death may result from sudden release of the power spring.

Before doing any repairs or adjustments on a service/parking brake chamber, read the applicable warnings and instructions in Group 42 of the *Walk-In Van Chassis Workshop Manual*.

15. Inspect the air brake chamber and the air brake chamber pushrods. See **Fig. 12.7**.

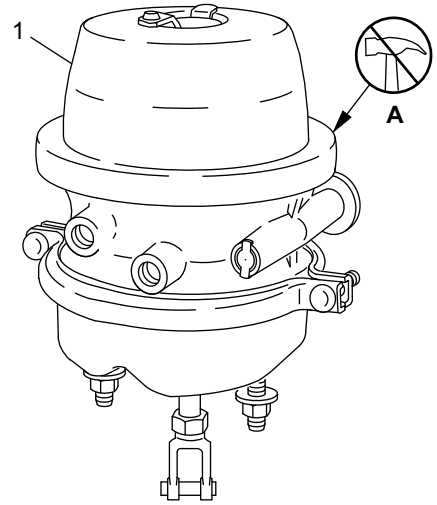

A. Do not remove this clamp ring.
1. MGM TR-T (TR Series) Brake Chamber shown

Fig. 12.7, Parking Brake Chamber Clamp

16. Inspect the slack adjusters.

16.1 *Meritor Slack Adjusters:* Check the boot for cuts, tears, or other damage. Have it replaced if necessary.

16.2 Inspect the slack adjuster boot for cuts or tears. If the boot is damaged, have it replaced. See **Fig. 12.8**.

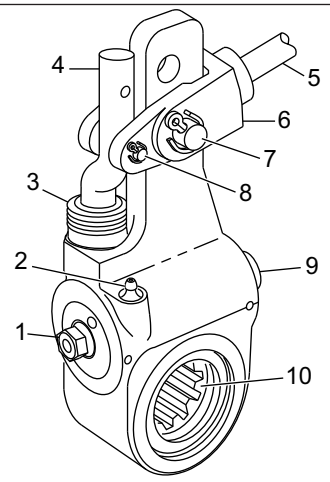

02/03/2017 f421398

1. 7/16-inch Adjusting Nut
2. Grease Fitting
3. Boot
4. Link
5. Brake Chamber Piston Rod
6. Clevis
7. 1/2-inch Clevis Pin
8. 1/4-inch Clevis Pin
9. Grease Relief Opening
10. Slack Adjuster Spline

Fig. 12.8, Automatic Slack Adjuster (typical)

17. *Check tire inflation pressures using an accurate tire pressure gauge.*

Tires should be checked when cool. For inflation pressures and maximum loads (per tire) see the tire manufacturer's guidelines.

17.1 Be sure valve stem caps are on every tire and that they are screwed on finger-tight.

17.2 Inflate the tires to the applicable pressures if needed.

17.3 If a tire has been run flat or underinflated, check for possible wheel or tire damage before adding air.

Moisture inside a tire can result in body ply separation or a sidewall rupture. During tire inflation, compressed air reservoirs and lines must be kept dry. Use well maintained inline moisture traps and service them regularly.

⚠ WARNING

Do not operate the vehicle with underinflated or overinflated tires. Incorrect inflation can stress the tires and make the tires and wheels susceptible to damage, possibly leading to wheel or tire failure and loss of vehicle control, resulting in serious personal injury or death.

IMPORTANT: The load and cold inflation pressure must not exceed the wheel manufacturer's recommendations, even though the tire may be approved for a higher load inflation. Some wheels are stamped with a maximum load and maximum cold inflation rating. If they are not stamped, consult the wheel manufacturer for the correct tire inflation pressure for the vehicle load. If the load exceeds the maximum wheel capacity, the load must be adjusted or reduced.

IMPORTANT: Low-rolling resistance (LRR) tires minimize wasted energy as a tire rolls, thereby decreasing rolling effort and improving fuel efficiency. If tire replacement is necessary, replacement tires must meet or exceed the rolling resistance of the originally installed tires in order to maintain compliance with greenhouse gas and fuel efficiency regulations.

Contact your tire manufacturer/supplier to determine the rolling resistance of the originally installed tires. Visit **www.epa.gov/smartway** for additional information and resources.

18. *Inspect each tire for wear, bulges, cracks, cuts, penetrations, and oil contamination.*A weekly pressure loss of 4 psi (28 kPa) or more in a tire may indicate damage. The tire should be inspected and if necessary, repaired or replaced.

18.1 Check the tire tread depth. If tread is less than 4/32 inch (3 mm) on any front tire, or less than 2/32 inch (1.5 mm) on any rear tire, replace the tire.

18.2 Inspect each tire for bulges, cracks, cuts, and penetrations.

18.3 Inspect each tire for oil contamination. Fuel, oil, gasoline, and other petroleum derivatives, if allowed to contact the tires, will soften the rubber and destroy the tire.

19. Check the wheel nuts for indications of looseness. Examine each wheel component.

    19.1 Remove all dirt and foreign material from the assembly. Dirt or rust streaks from the stud holes, metal buildup around stud holes, or out-of-round or worn stud holes may be caused by loose wheel nuts. See **Fig. 12.9** and **Fig. 12.10**.

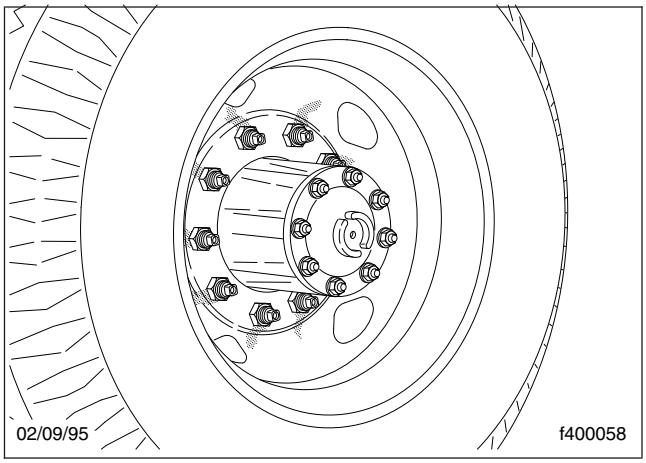

Fig. 12.9, Dirt and Rust Streaks from the Stud Holes

WARNING

Have any worn or damaged wheel components replaced by a qualified person using the wheel manufacturer's instructions and the wheel industry's standard safety precautions and equipment. Otherwise a vehicle or workshop accident could occur, possibly resulting in serious personal injury or death.

    19.3 Make sure all wheel nuts are tightened 450 to 500 lbf·ft (610 to 678 N·m) for Accuride wheels with unlubricated threads. Use the tightening pattern in **Fig. 12.11** for 10-hole wheels and **Fig. 12.12** for 8-hole wheels. See **Group 40** of the *Walk-In Van Chassis Workshop Manual*.

NOTICE

Insufficient wheel nut torque can cause wheel shimmy, resulting in wheel damage, stud breakage, and extreme tire tread wear. Excessive wheel nut torque can break studs, damage threads, and crack discs in the stud hole area.

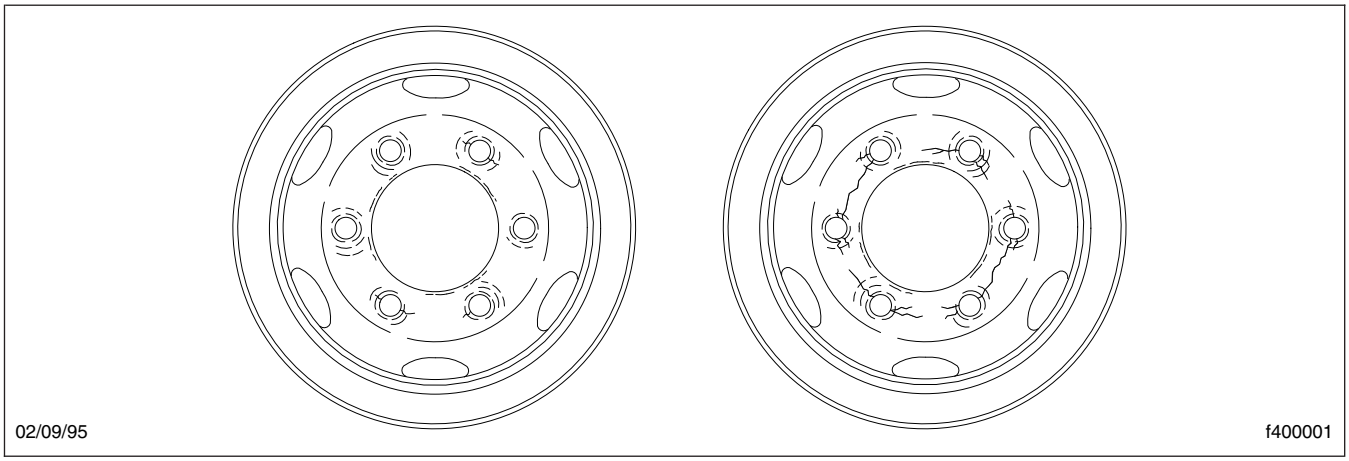

Fig. 12.10, Worn Stud Holes

    19.2 Examine the wheel components (including studs and nuts) for cracks or other damage.

    See **Group 33** or **Group 35** of the *Walk-In Van Chassis Workshop Manual* for service procedures on the studs and hubs, and see **Group 40** in the same manual for wheel and tire servicing, or take the vehicle to an authorized Freightliner dealer.

Use the recommended torque values and follow the proper tightening sequence.

NOTE: Vehicles operating under severe or adverse conditions should be checked more frequently.

20. *Check the air brake system for proper operation.*

    20.1 Check the air governor cut-in and cut-out pressures as follows:

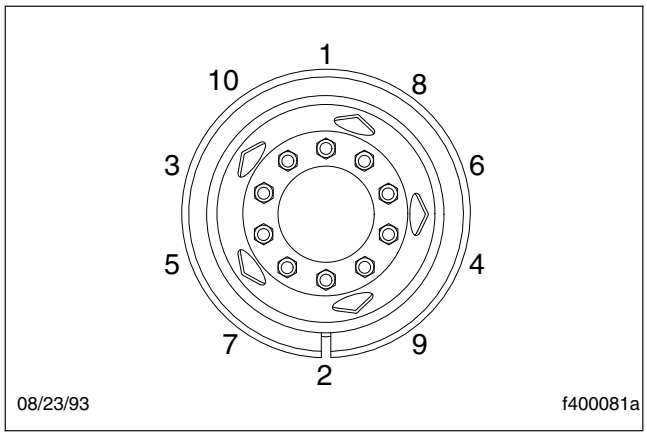

Fig. 12.11, Tightening Pattern, 10-Hole Wheels

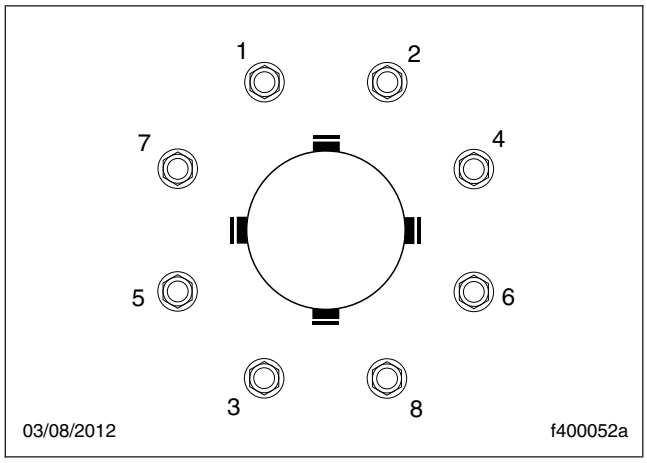

Fig. 12.12, Tightening Pattern, 8-Hole Wheels

Run the engine at fast idle. The air governor should cut out the air compressor at approximately 120 psi (827 kPa). With the engine idling, apply the brake pedal several times. The air governor should cut in the air compressor at approximately 100 psi (689 kPa). If the air governor does not cut in and out as described above, it must be adjusted to these specifications. If the air governor cannot be adjusted or repaired, replace it before operating the vehicle.

20.2 Check the air pressure buildup times as follows:

With the air system fully charged to 120 psi (827 kPa), make one full brake application and note the air pressure reading on the gauge. Continue to reduce the air pressure by moderate brake applications to a maximum of 90 psi (620 kPa), then run the engine at governed rpm. If the time required to raise the air pressure to 120 psi (827 kPa) (from the pressure noted after one brake application) is more than 30 seconds, eliminate any leaks or replace the air compressor before operating the vehicle.

20.3 Check the air pressure reserve as follows:

With the air system fully charged to 120 psi (827 kPa), stop the engine and note the air pressure. Then make one full brake application and observe the pressure drop. If it drops more than 25 psi (172 kPa), all areas of leakage must be eliminated before operating the vehicle.

20.4 Check the air leakage in the system as follows:

With the parking brake (spring brake) applied, the transmission out of gear, and the tires chocked, charge the air system until cut-out pressure of 120 psi (827 kPa) is reached.

With the service brakes released, shut down the engine, wait 1 minute and note the air pressure gauge reading. Observe the air pressure drop in psi (kPa) per minute.

Charge the air system until cut-out pressure of 120 psi (827 kPa) is reached. With the parking brakes released and the service brake applied, shut down the engine, wait 1 minute and note the air pressure gauge reading. Observe the air pressure drop in psi (kPa) per minute.

If leakage exceeds the limits shown in **Table 12.1**, repair all areas of leakage before driving the vehicle.

Maximum Allowable Service Brake Leakage	
Brakes Released	**Brakes Applied**
2 psi/min. (14 kPa)	3 psi/min. (21 kPa)

Table 12.1, Maximum Allowable Service Brake Leakage

21. *Test the parking brake on a 20 percent grade.*

Apply the hand brake with the vehicle on a 20 percent grade (or as steep a grade that the vehicle may normally be parked on). The ramp surface should be made of Portland cement or

equivalent. If the parking brake does not hold the vehicle, repair the parking brake system.

22. Check the operation of the Bendix® Hydro-Max brake booster, as follows.

    22.1 With ignition off, depress the brake pedal and listen for the back-up motor to engage. Also, note that the pedal force relieves; the pedal should depress easily.

    22.2 With the ignition off, engine running, parking brake released, ensure that the BRAKE warning indicator light is **not** on. This is a dual indicator and indicates that the parking brake is set, and warns if there is a hydro-max failure other than loss of back-up motor power.

23. *Inspect the engine and chassis wiring.*

    Check for loose wiring, chafed insulation, and damaged or loose hold-down clamps. Tighten loose wires or hold-down clamps; replace damaged wiring or clamps.

24. *Test the service brakes.*

    When starting to move the vehicle and before picking up speed, test the brakes with the foot pedal and parking brake control valve (yellow knob) to be sure they will bring the vehicle to a safe stop.

Weekly Post-Trip Inspection and Maintenance Procedures

1. *Inspect the batteries and battery cables.*

⚠ WARNING

Battery posts, terminals, and related accessories contain lead and lead compounds, chemicals known to the State of California to cause cancer and reproductive harm. To prevent possible personal injury, always wash your hands after handling battery parts and related accessories.

1.1 Check the battery cables for chafing and proper routing. Be sure the battery hold-down is secure. If it is loose, tighten the hold-down bolts; if it is damaged, replace it. Replace the battery cable if damaged.

1.2 If the battery is equipped with a built-in hydrometer, examine the hydrometer. If a green dot shows in the sight glass, the battery is sufficiently charged.

If the sight glass is dark, the charge is low and the battery must be recharged.

If the sight glass is clear, the battery has a low level of electrolyte and must be replaced.

2. *Check the level of the wheel bearing lubricant in the hub cap at each end of the front axle.*

   If needed, fill the hubs to the level indicated on the hub cap. See **Chapter 15**, for recommended lubricants.

IMPORTANT: Before removing the fill plug, always clean the hub cap and plug.

3. *Examine the steering components.*

   See **Fig. 12.13**. If repairs are needed, see **Group 46** of the *Walk-In Van Chassis Workshop Manual* for instructions, or take the vehicle to an authorized Freightliner dealer.

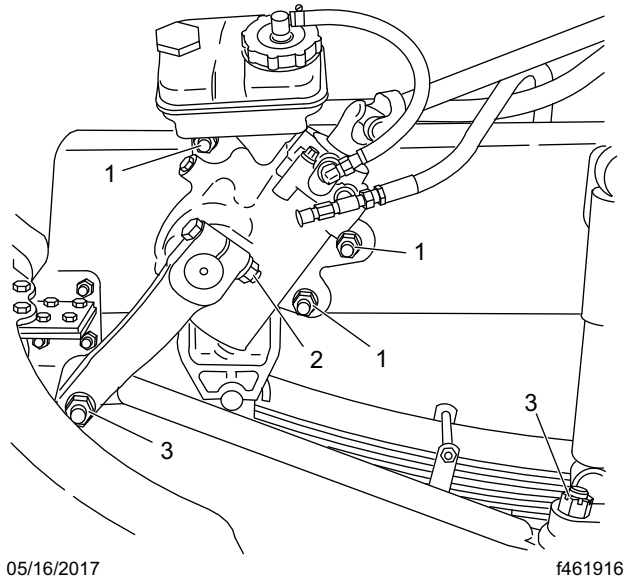

1. Steering Gear Mounting Bolt
2. Pitman Arm Pinch Bolt Nut
3. Drag Link Nut

Fig. 12.13, Steering Gear Fasteners

3.1 Check the mounting bolts and pitman arm nut, for tightness.

3.2 Check the drag link nuts for missing cotter pins.

3.3 Inspect the steering drive shaft and steering linkage for excessive looseness, or other damage.

3.4 Tighten loose nuts and have damaged parts replaced as needed.

4. *Check the condition of the drive belts.*

   Check the fan belt(s), alternator belt, and refrigerant compressor belt for signs of glazing, wear (frayed edges), damage (breaks or cracks), or oil contamination. If a belt is glazed, worn, damaged, or oil soaked, replace the belt, following the instructions in **Group 01** of the *Walk-In Van Chassis Workshop Manual.*

5. *Check the drive belt for proper tension.* Use your index finger to apply approximately 25 pounds (11 kg) of force at the center of the belt free-span. See **Fig. 12.14**. Deflection should be one belt thickness per 1 foot (300 mm) of belt free-span. If the tension is more than or less than this value, measure it with a belt-tension gauge and adjust it to the proper tension. See **Group 01** of the *Walk-In Van Chassis Workshop Manual* for instructions.

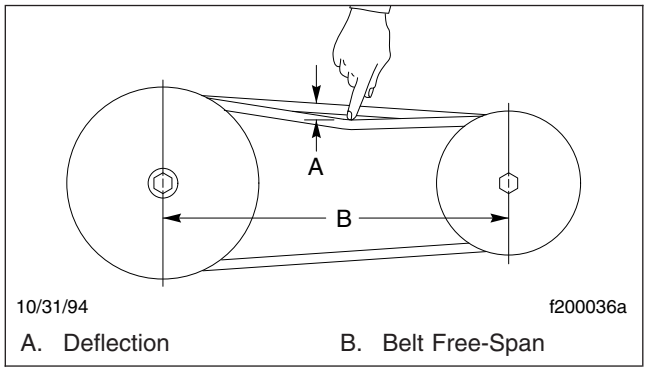

Fig. 12.14, Checking Belt Tension

NOTE: On Cummins engines, a belt tensioner automatically adjusts the fan and alternator belt to correct tension. If the belt slips, repair or replace the tensioner. For instructions, see the *Cummins Engine Operation and Maintenance Manual*.

Monthly Post-Trip Inspection and Maintenance Procedures

⚠ WARNING

Battery posts, terminals, and related accessories contain lead and lead compounds, chemicals known to the State of California to cause cancer and reproductive harm. To prevent possible personal injury, always wash your hands after handling battery parts and related accessories.

1. *Clean the batteries.*

   1.1 Remove any corrosion from the hold-down and the top of the battery.

NOTICE

Take care to keep the vent plugs tight so that the neutralizing solution does not enter any of the battery cells and damage the battery.

   1.2 Use a soda solution to neutralize the acid present, then rinse off the soda solution with clean water.

   1.3 If the battery posts or cable terminals are corroded, disconnect the terminals from the posts. Clean them with a soda solution and a wire brush. After cleaning, connect the terminals to the battery posts, then apply a thin coat of petroleum jelly to the posts and terminals to help retard corrosion.

2. Inspect the radiator and heater hoses, including the clamps and support brackets.

   2.1 Make sure the radiator inlet and outlet hoses are pliable and are not cracking, weakening, or ballooning.

   2.2 Make sure the heater hoses are pliable and are not cracking or ballooning. Replace hoses that show signs of cracking, weakening, or ballooning.

   2.3 Tighten hose clamps as necessary, but do not overtighten, as hose life can be adversely affected.

   2.4 Be sure the hose support brackets are securely fastened. Make sure the hoses are not located near sources of wear, abrasion, or high heat.

IMPORTANT: Replace all hoses, including heater hoses, at the same time. Service-type knitted or braided yarn-reinforced neoprene hose is acceptable. Silicone hoses having an extended service life can be substituted for the reinforced neoprene type. See the *Freightliner Service Parts Catalog* or contact your Freightliner Dealer.

3. *Check the fluid level in the hydraulic brake fluid reservoir, if so equipped.*

   If needed, fill the reservoir to the bottom of the fill-neck with DOT 3 heavy-duty brake fluid. See **Fig. 12.15**.

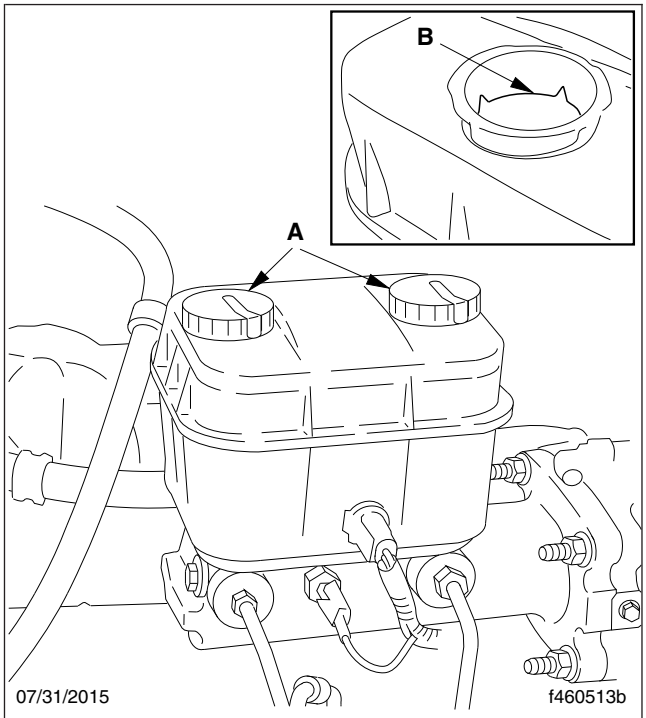

A. Open caps and check fluid level.
B. Fill to this level.

Fig. 12.15, Hydraulic Brake Reservoir

4. *Check the steering wheel for excessive play.*

   With the front tires pointing straight ahead, turn the steering wheel until motion is observed at the front wheels. Align a reference mark on a ruler, then slowly turn the steering wheel in the opposite direction until motion is again detected at the wheels. Measure the lash (free play) at the rim of the steering wheel. See **Fig. 12.16**.

   Excessive lash exists if steering wheel movement exceeds 4-3/4 inches (121 mm) with an 18-inch (470 mm) steering wheel. If there is excessive lash, check the steering system for wear or incorrect adjustment of the linkage and steering gear before operating the vehicle.

5. Check the brake lining wear on vehicles equipped with air brakes. Proper brake operation is dependent on periodic maintenance and inspection of the brake linings.

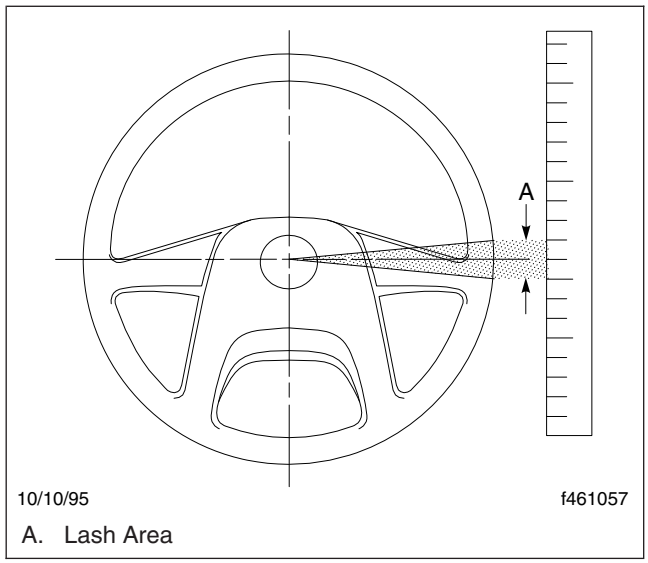

A. Lash Area

Fig. 12.16, Measuring Lash at the Steering Wheel

5.1 Apply the parking brakes, and chock the tires to prevent vehicle movement.

5.2 If the axle assembly is not equipped with a dust shield or backing plate, measure the axle brake lining thickness. If *any* of the brake linings are worn to less than 3/16 inch (4.8 mm) at the thinnest point, replace the linings on *all* brake assemblies on that axle. See **Group 42** of the *Walk-In Van Chassis Workshop Manual* for lining replacement instructions and camshaft end play inspection.

5.3 If the axle assembly is equipped with a dust shield or backing plate, remove the inspection plugs to inspect the brake lining thickness. If any of the brake linings are worn to less than approximately 3/16 inch (4.8 mm) at the thinnest point, replace the linings on all brake assemblies on that axle. See **Group 42** of the *Walk-In Van Chassis Workshop Manual* for lining replacement instructions and camshaft end play inspection.

5.4 Install the inspection plugs in the dust shields or backing plates, if so equipped.

5.5 Remove the chocks from the tires.

13

Cleaning and Care

Washing and Polishing 13.1
Care of Chrome Parts 13.1
Dashboard and Instrument Panel Care 13.1

Cleaning and Care

Washing and Polishing

To extend the life of your vehicle's finish, follow these guidelines:

- Rinse the undercarriage regularly during the winter months to protect it from mud and road salt corrosion.
- Do not let diesel fuel or antifreeze stand on a painted chassis surface. If either should occur, rinse the surface off with water.
- To prevent frame corrosion, have any nicks or other damage on the frame finish touched up as soon as possible.

To prevent delamination and deterioration of labels and stickers on the cab, follow these guidelines carefully:

- Do not pressure wash the label or sticker or surfaces near it.
- Do not use strong alkaline soaps on or near the label or sticker.

Care of Chrome Parts

To prevent rust, keep chrome parts clean and protected at all times. This is especially important during winter driving and in coastal areas where there is exposure to salt air.

When cleaning chrome parts, use clean water and a soft cloth or sponge. A mild detergent may also be used.

Sponge gently, then rinse. If necessary, use a non-abrasive chrome cleaner to remove stubborn rust or other material. Do not use steel wool.

To help protect the chrome after cleaning, apply a coat of polishing wax to the surface. Never use wax on parts that are exposed to high heat, such as exhaust pipes.

Dashboard and Instrument Panel Care

NOTICE

When cleaning the dashboard, instrument panel, or gauge lens covers, do not use Armor-All Protectant®, STP Son-of-a-Gun®, window cleaner, or other equivalent treatments. These cleaners contain vinyl plasticizers which can cause stress crazing in the interior plastic panels and can result in cracking of the panels. Some cleaners can also have an adverse effect on the clear plastic of instrument panels and gauge lens covers, resulting in a foggy or cloudy appearance. This type of damage is not covered by vehicle warranty.

To clean the dashboard, instrument panel, and gauge lens covers, use a cloth dampened with warm soapy water. Make certain to wring the cloth out well before cleaning, as excess water will damage the electrical components.

14

In an Emergency

Hazard Warning Lights 14.1
Raising and Lowering a Vehicle 14.1
Towing 14.2
Emergency Starting With Jumper Cables 14.2
Changing a Flat Tire 14.4
Running Out of Fuel 14.5

Hazard Warning Lights

To activate the hazard warning lights, push the hazard warning light switch on the right side of the steering column. See **Fig. 14.1**. When the hazard warning lights are activated, all of the turn signal lights and both of the turn signal indicator lights on the instrument panel will flash.

To cancel the warning lights, push the switch in on the right side of the steering column.



02/27/2019 f462366a

1. Hazard Warning Light Switch

Fig. 14.1, Hazard Warning Light Switch

Raising and Lowering a Vehicle

Raising a Vehicle with Air Suspension

1. Park the vehicle on a level surface, set the parking brakes, and shut down the engine. Chock the tires.

⚠ WARNING

Remove the air from the suspension. Failure to remove the air from the suspension may cause the vehicle to move or shift on the jack stands as air pressure drains from the system; this could cause the vehicle to fall, resulting in damage to the vehicle, serious injury, or death.

2. Exhaust all air from the air suspension.

⚠ WARNING

Do not use bottle jacks to raise the vehicle. Always use floor jacks. Bottle jacks can slip, allowing the vehicle to fall, which could result in damage to the vehicle, serious injury, or death.

IMPORTANT: Only lift unloaded vehicles and vehicles disconnected from trailers. Unload vehicles with bodies (drilling rigs, mixers) as much as possible.

3. Place a floor jack under the axle housing, the clamp group, or the frame rail.

NOTICE

NOTICE: Do not place jack stands under any of the suspension components; doing so could cause suspension component damage. Jack stands can be placed at any point below the axle, including the differential area.

4. Raise the vehicle. Add additional jack stands, as needed, under the axles to support the vehicle.

Lowering a Vehicle with Air Suspension

⚠ WARNING

Do not use bottle jacks to raise the vehicle. Always use floor jacks. Bottle jacks can slip, allowing the vehicle to fall, which could result in damage to the vehicle, serious injury, or death.

NOTICE

NOTICE: Do not place jack stands under any of the suspension components; doing so could cause suspension component damage. Jack stands can be placed at any point below the axle, including the differential area.

1. Using the floor jack, raise the vehicle to remove any jack stands used to support the vehicle.
2. Slowly lower the vehicle to the ground.
3. Inflate the air suspension, and check for proper operation. Refer to **Group 32** in the *Walk-In Van Chassis Workshop Manual* for instructions.

Raising a Vehicle without Air Suspension

1. Park the vehicle on a level surface, set the parking brakes, and shut down the engine. Chock the tires.

⚠ WARNING

Do not use bottle jacks to raise the vehicle. Always use floor jacks. Bottle jacks can slip, allowing the vehicle to fall, which could result in damage to the vehicle, serious injury, or death.

IMPORTANT: Only lift unloaded vehicles and vehicles disconnected from trailers. Unload vehicles with bodies (drilling rigs, mixers) as much as possible.

2. Place a floor jack under the axle housing, the clamp group, or the frame rail.

NOTICE

NOTICE: Do not place jack stands under any of the suspension components; doing so could cause suspension component damage. Jack stands can be placed at any point below the axle, including the differential area.

3. Raise the vehicle. Add additional jack stands, as needed, to support the vehicle.

Lowering a Vehicle without Air Suspension

⚠ WARNING

Do not use bottle jacks to raise the vehicle. Always use floor jacks. Bottle jacks can slip, allowing the vehicle to fall, which could result in damage to the vehicle, serious injury, or death.

NOTICE

NOTICE: Do not place jack stands under any of the suspension components; doing so could cause suspension component damage. Jack stands can be placed at any point below the axle, including the differential area.

1. Using the floor jack, raise the vehicle to remove any jack stands used to support the vehicle.
2. Slowly lower the vehicle to the ground.

Towing

See **Chapter 15** for towing information.

Emergency Starting With Jumper Cables

When using jumper cables, follow the instructions below.

⚠ WARNING

Batteries release explosive gas. Do not smoke when working around batteries. Put out all flames and remove all sources of sparks or intense heat in the vicinity of the battery. Do not allow the vehicles to touch each other. Do not lean over the batteries when making connections, and keep all other persons away from the batteries. Failure to follow these precautions could lead to severe personal injury as a result of an explosion or acid burns.

NOTICE

Make sure that both starting systems are the same voltage. Electronic devices on both vehicles can be damaged when connected to a vehicle with a different operating voltage.

1. Apply the parking brakes and turn off all lights and other electrical devices.

IMPORTANT: Do not attempt to jump start a damaged battery.

2. Access the batteries under the passenger steps.

NOTICE

Always connect the batteries and jumper cables correctly (positive-to-positive and negative-to-negative). Connecting a charging device backwards (positive-to-negative) can severely damage the vehicle electrical content and cause non-warrantable failures.

3. Connect the positive (+) jumper cable to the positive terminal on the discharged battery. See **Fig. 14.2**.
4. Connect the other end of the positive jumper cable to the positive terminal on the booster battery providing the charge.

⚠ WARNING

Do the next step exactly as instructed and do not allow the clamps of one cable to touch the

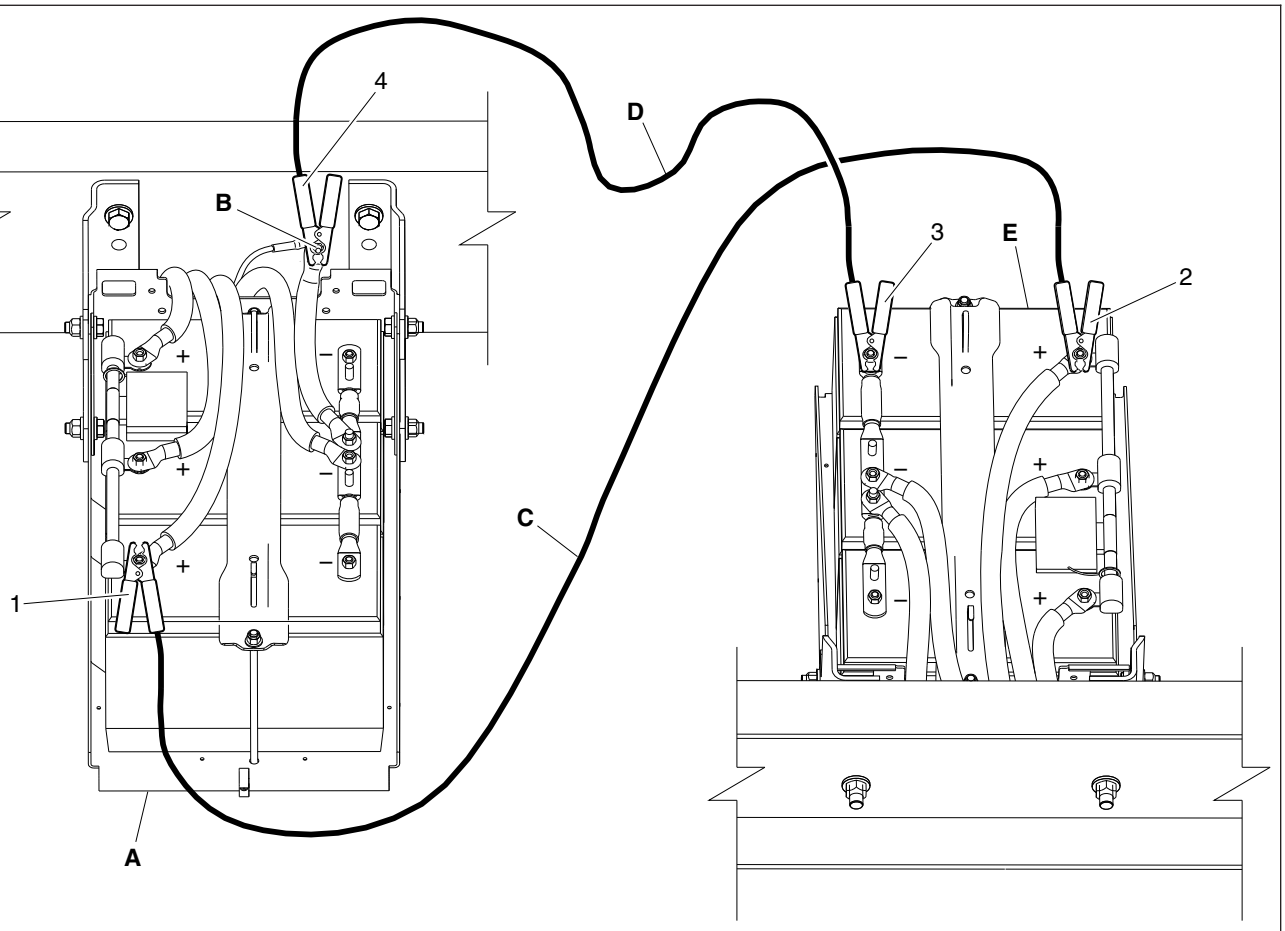

Disconnect jumper cables in the REVERSE order that they were connected.

A. Discharged Battery
B. Negative Ground Stud
C. Positive Jumper Cable
D. Negative Jumper Cable
E. Booster Battery

1. 1st Connection: Positive Jumper Cable to Discharged Battery
2. 2nd Connection: Positive Jumper Cable to Booster Battery
3. 3rd Connection: Negative Jumper Cable to Booster Battery
4. 4th Connection: Negative Jumper Cable to Negative Ground Stud (discharged battery)

Fig. 14.2, Jumper Connections (three battery system shown for clarity)

clamps of the other cable. Otherwise, a spark could occur near a battery, possibly resulting in severe personal injury from explosion or acid burns.

5. Connect the negative (-) jumper cable to the negative terminal on the booster battery.
6. Connect the other end of the negative jumper cable to the negative ground stud on the vehicle requiring the jump start.
7. Start the engine of the vehicle providing the jump start and let the engine run for a few minutes to charge the batteries of the other vehicle.

NOTICE

Do not crank the engine for more than 30 seconds at a time during any of the following procedures. Wait two minutes after each try to allow the starter to cool. Failure to do so could cause starter damage.

8. Attempt to start the engine of the vehicle with the batteries receiving the charge.
9. When the engine starts, let it idle for a few minutes.

⚠ WARNING

Do the next step exactly as instructed and do not allow the clamps of one cable to touch the clamps of the other cable. Otherwise, a spark could occur near a battery, possibly resulting in severe personal injury from explosion or acid burns.

10. Disconnect the negative jumper cable from the negative cable stud on the jump started vehicle.
11. Disconnect the negative jumper cable from the booster battery.
12. Disconnect the positive cable from the booster battery.
13. Disconnect the other end of the positive jumper cable from the jump started vehicle.
14. Close the battery access door at the passenger steps.

Changing a Flat Tire

⚠ DANGER

When working on the vehicle, shut down the engine, set the parking brake,and chock the tires. before working under the vehicle, always place jack stands under the frame rails to ensure the vehicle can not drop. Failure to follow these steps could result in serious personal injury or death.

⚠ WARNING

Wheel lug nut torque is very high and the wheel/tire assemblies are very heavy. Changing a tire could result in back injury. If possible, call a qualified service facility to change a flat tire.

IMPORTANT: If a flat tire occurs while driving, gradually decrease vehicle speed. Holding the steering wheel firmly, move the vehicle to a safe location as quickly as possible.

1. If possible, stop the vehicle on a level surface away from traffic.
2. Apply the parking brake and place the transmission in Park (P). Turn the ignition switch to the OFF position.
3. Turn on the hazard warning lights.
4. Remove the spare wheel, jack, jack handle, and lug wrench (if so equipped) from storage.
5. Block the wheel diagonally opposite the wheel being changed.

⚠ WARNING

This vehicle is very heavy. Jacking this vehicle should be done with extreme caution. The vehicle could slip, causing personal injury or death.

NOTICE

The jacking point for the front and rear wheels is directly under the axle. Insert a wooden block between the axle and the jack. Do not jack directly on the axle housing.

6. Place the jack on a solid surface. Insert the jack handle and pump the handle to slightly raise the vehicle. *Do not raise the wheel off of the ground.* Loosen the wheel lug nuts, but do not remove them.

NOTE: Dual stud-piloted rear wheels are attached using inner and outer (2-element) lug nuts. The larger nut retains the outer dual (stud-piloted), 2-piece wheel. The inner square nut retains the inner dual (stud-piloted) wheel. Remove and install these nuts separately. The rear dual outer lug nut must be removed and loosened to check and retighten the inner nut. Hub-piloted wheels use a single outer lug nut that holds both discs on the hub pilot.

7. Raise the vehicle until the wheel is off of the ground. Remove the lug nuts and the wheel.
8. Install the spare wheel and lug nuts. Make sure that the beveled sides of the nuts face inward.
9. In a star pattern, tighten the nuts evenly until snug.
10. Lower the vehicle until the wheel touches the ground. Tighten the nuts in the same pattern 450 to 500 lbf·ft (610 to 678 N·m).
11. Finish lowering the vehicle to the ground, then remove the jack.

12. Remove the block, then stow the jack, jack handle, and lug wrench (if so equipped).
13. After operating the vehicle for 50 to 100 miles (80 to 161 km), retighten the nuts (for stud-piloted dual discs, all inner, then all outer) 450 to 500 lbf·ft (610 to 678 N·m).

Running Out of Fuel

Diesel Engines

⚠ WARNING

Diesel fuel is flammable. When you approach a vehicle and the smell of diesel fuel is present, immediately shut off all engines and ignition sources. Avoid causing sparks and stay away from arcing switches and equipment. Extinguish cigarettes, pilot lights, flames, or other sources of ignition in the area and adjacent areas. Immediately provide extra ventilation to the area. Do not start the vehicle or any other type of equipment until the fuel leak is corrected and the area cleared of fuel. Failure to perform these actions could lead to the ignition of the fuel, which could cause personal injury or death, or severe property damage.

If the vehicle runs out of fuel, try to stop the vehicle on a level location away from traffic. Add at least 2 gallons (8 liters) of fuel to the fuel tank in order to restart the engine. If the vehicle is not level, up to 4 gallons (16 liters) of fuel may be required. Prolonged engine cranking may be required to pump fuel from the fuel tank to the engine before the engine will start.

NOTICE

Do not crank the engine for more than 30 seconds at a time. Wait two minutes after each try to allow the starter to cool. Failure to do so could cause starter damage.

If the vehicle will not start by cranking the engine, the fuel system may need to be primed. See the applicable engine manufacturer's operation and maintenance manual.

Compressed Natural Gas (CNG) Engines

⚠ WARNING

Compressed natural gas is highly flammable. When inspecting or servicing a vehicle, avoid causing sparks or using arcing switches and equipment. Extinguish cigarettes, pilot lights, flames, or other sources of ignition. Failure to perform these actions or to take other precautions could lead to the ignition of the natural gas, which could cause serious bodily injury, death, or severe property damage.

If the vehicle runs out of fuel, park on a level location away from traffic. Restart the engine after adding at least 30 psi (207 kPa) of fuel.

NOTICE

Do not crank the engine for more than 30 seconds at a time. Wait two minutes after each try to allow the starter to cool. Failure to do so could cause starter damage.

15

Towing

Front Towing Hookup 15.1
Rear Towing Hookup 15.1

Front Towing Hookup

⚠ WARNING

Do not tow an unbraked vehicle if the combined weight of both vehicles is more than the sum of the gross axle weight ratings (GAWR) of the towing vehicle. Otherwise brake capacity will be inadequate, which could result in personal injury or death.

IMPORTANT: When it is necessary to tow the vehicle, make sure the instructions below are closely followed to prevent damage to the vehicle.

NOTE: Towing rules and regulations vary from federal, state, local, and transit authority. These laws must be followed when towing the vehicle.

1. Disconnect the battery ground cables.

NOTICE

Failure to remove the axle shafts when towing the vehicle with the rear wheels on the ground could result in damage to the transmission and other components.

2. Remove the drive axle shafts.

IMPORTANT: Cover the ends of the hubs with metal plates or plywood cut to fit the axle opening, and drilled to fit the axle shaft studs. This prevents lubricant from leaking out, and will keep contaminants from getting into the axle lubricant and damaging the wheel bearings.

3. If additional clearance is needed for towing, remove the bumper.

⚠ WARNING

Due to the many variables that exist in towing, positioning the lifting and towing device is the sole responsibility of the tow vehicle operator. The operator must be familiar with standard towing industry safety measures. Improper procedures could result in personal injury or death.

4. Attach the towing device.

NOTICE

Failure to protect the frame rails from the chains could cause damage, leading to eventual frame failure.

5. Lift the vehicle and secure the safety chains. If extra towing clearance is needed, remove the front wheels.
6. Connect the clearance lights, taillights, and signal lights. Connect any special towing lights required by local regulations.

⚠ WARNING

Failure to chock the tires or connect the tow truck's air brake system before releasing the spring parking brakes could allow the disabled vehicle to suddenly roll. This could cause property damage or personal injury.

NOTICE

Before attempting to tow a vehicle with an air suspension (and during the towing operation), ensure that the air suspension is properly charged. Charge the suspension through the Schrader valve on the air dryer. Attempting to tow a vehicle with an improperly charged air suspension may result in damage to the chassis and body.

7. Chock the tires on the disabled vehicle and connect the towing vehicle's air brake system to the vehicle being towed. Then, release the spring parking brake and remove the chocks.
8. On vehicles equipped with hydraulic disc brakes be sure the parking brake is released before starting the towing process.

Rear Towing Hookup

1. Position the front tires pointing straight ahead, and secure the steering wheel in this position.
2. Disconnect the battery ground cable.

⚠ WARNING

Due to the many variables that exist in towing, positioning the lifting and towing device is the sole responsibility of the tow vehicle operator.

The operator must be familiar with standard towing industry safety measures. Improper procedures could result in personal injury or death.

3. Attach the towing device.
4. Lift the vehicle, and secure the safety towing chains. If additional clearance is needed, remove the bumper extension, if so equipped.
5. Connect the clearance lights, taillights, and signal lights. Also connect any special towing lights required by local regulations.

16

DRIVEFORCE Gasoline Engine

Starting the Engine 16.1
Engine Break-In 16.3
Fast Idle System 16.3
Engine Coolant 16.3
Fuel 16.4
Engine Oil 16.4
Ametek Instrument Panel 16.5
Warning and Indicator Lights 16.8
Speedometer and Tachometer 16.10
Standard Instruments 16.10

Starting the Engine

IMPORTANT: For service issues and questions, call 1-800-FTL-HELP and follow the prompts for gasoline engines. Representatives will be able to answer questions and diagnose mechanical issues, as well as provide detailed service repair information.

General Information

NOTE: Before starting the engine, read **Chapter 4** and **Chapter 5** in this manual for detailed information on how to read the instruments and operate the controls.

Before operating the vehicle, perform the engine pretrip inspection and daily maintenance checks in **Chapter 11** and **Chapter 12** of this manual.

NOTICE

If a vehicle does not start on the first attempt, make sure that the engine has completely stopped rotating before reapplying the starter switch. Failure to do so can cause the pinion to release and re-engage, which could cause ring gear and starter pinion damage.

IMPORTANT: Ring gear and starter pinion damage caused by improper starting procedures is not warrantable.

NOTICE

Never attempt to start any electronic engine using ether or any other starting fluid. Serious engine damage could result.

1. Set the parking brake.
2. Turn the ignition switch to the ON position. See **Fig. 16.1** for the four-position ignition switch and **Fig. 16.2** for the three-position ignition switch.
3. Make sure that the transmission shift control is in Neutral (N) or Park (P), and that the park brake is set.

IMPORTANT: Do not depress the throttle pedal while starting the engine.

4. Turn the ignition switch to the START position. After the engine starts, release the key.

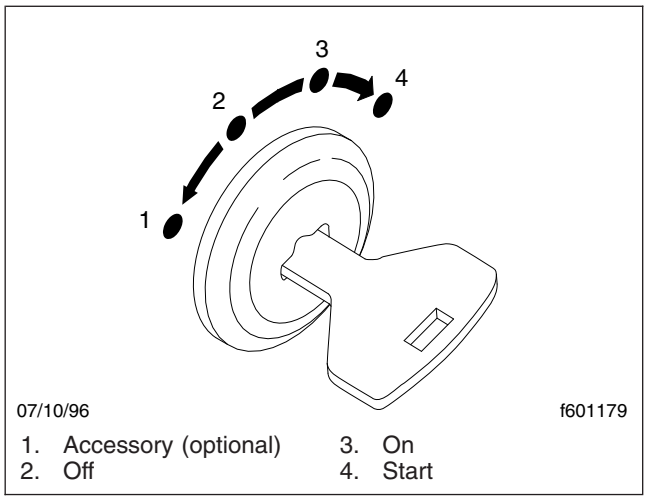

Fig. 16.1, Four-Position Ignition Switch

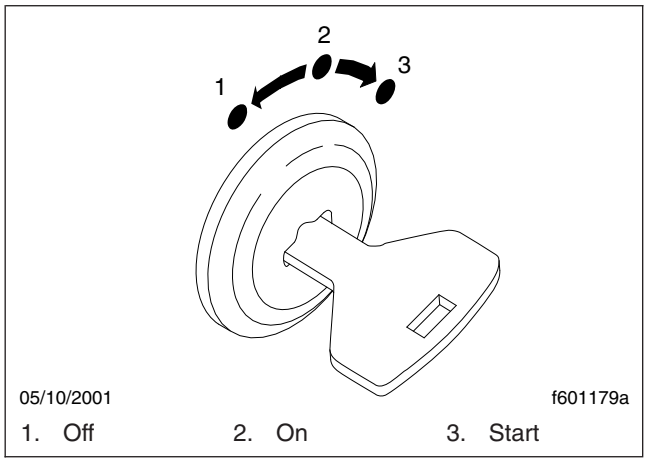

Fig. 16.2, Three-Position Ignition Switch

NOTICE

Do not crank the engine for more than 30 seconds at a time. Wait two minutes after each try to allow the starter to cool. Failure to do so could cause starter damage.

5. Bring the engine up to operating speed gradually as it warms up and develops stable oil pressure.

IMPORTANT: When the engine is started, it takes a short time to build up a lubricating oil film between the shafts and bearings, and between the pistons and cylinder walls. The oil pressure gauge indicates any drop in lubricating oil pressure within 15 seconds of engine start-up.

6. If the engine does not start after 5 to 10 seconds, especially in very cold weather below 0°F (–18°C), it could be flooded with too much gasoline. Try pushing the throttle pedal all the way to the floor and holding it there as you hold the key in the START position for up to 15 seconds

NOTICE

Do not crank the engine for more than 30 seconds at a time. Wait two minutes after each try to allow the starter to cool. Failure to do so could cause starter damage.

7. If the vehicle starts briefly but then stops again, repeat the process. This will clear the excess gasoline from the engine.
8. Do not race the engine immediately after starting it. Operate the engine and transmission gently until the oil warms up and lubricates all of the moving parts.

MIL Lamp

NOTICE

If the vehicle is continually driven when the MIL lamp is activated, the emission controls may not work as well, the vehicle fuel economy may not be as good, and the engine may not run as smoothly. This could lead to costly repairs that may not be covered by the vehicle warranty.

Modifications made to the engine, transmission, exhaust, intake, or fuel system of the vehicle, or replacing the original tires with tires that do not meet the same tire performance criteria, can affect the vehicle's emission controls and can cause the MIL lamp to activate. Modifications to these systems could lead to costly repairs not covered by the vehicle warranty. This could also result in a failure to pass required emission inspection and/or maintenance tests.

When the MIL lamp activates, it can either flash on and off, or remain on with a constantly illuminated lamp.

MIL Lamp Flashes

IMPORTANT: If the MIL lamp flashes on and off while driving the vehicle, the driver should find a safe place to park and stop the vehicle immediately. See **Fig. 16.3** for an example of the MIL lamp. The vehicle should be taken to an authorized Freightliner dealer as soon as possible for service. Continued driving with an illuminated MIL lamp could damage the emission system and void the warranty.

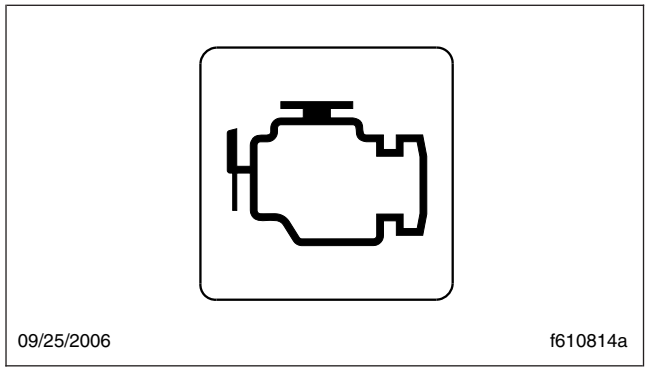

Fig. 16.3, MIL Lamp

The MIL lamp illuminates to indicate a fault that affects the emission system; a misfire condition is one example. Diagnosis and service may be required. To prevent serious damage to the vehicle, observe the following guidelines:

- Reduce vehicle speed.
- Avoid hard accelerations.
- Avoid steep uphill grades.

Once the MIL lamp begins flashing, the driver should find a safe place to stop. Turn the vehicle off, wait at least 10 seconds, and then restart the vehicle. If the MIL lamp continues to flash, observe the guidelines listed above and see a dealer for service as soon as possible.

MIL Lamp is on Constant (steady)

A constant (steady) MIL lamp indicates that an emission system malfunction has been detected on the vehicle. Diagnosis and service may be required. The following information may correct an emissions system malfunction.

- Make sure the fuel cap is fully installed. The diagnostic system can determine if the fuel cap has been left off or is incorrectly installed. A missing or loose fuel cap allows fuel to evaporate into the atmosphere. A few driving trips with the fuel cap properly installed should turn the MIL lamp off.
- If the vehicle has been driven through a deep puddle of water, the system could be wet. Inspect the electrical system and make sure it is

not wet. This condition is usually corrected when the electrical system dries out. A few driving trips should turn the MIL lamp off.

- Make sure to fuel the vehicle with quality fuel. Poor fuel quality causes the engine not to run as efficiently as designed and can cause—
  - – stalling after start-up;
  - – stalling when the vehicle is changed into gear;
  - – misfiring;
  - – hesitation on acceleration; or
  - – stumbling on acceleration.

If one or more of these conditions occur, change the fuel brand used. At least one full tank of the proper fuel will be required to turn the MIL lamp off. See 'Fuel' in this chapter for information on the proper fuel to use.

If the MIL lamp will not go off after performing the above steps, your dealer can check the vehicle. The dealer has the proper test equipment and diagnostic tools to fix any mechanical or electrical problems that may have developed.

Engine Break-In

The engine will perform better over time if the guidelines below are followed.

- Warm up the engine by driving easily for the first few minutes before placing it under load.
- Keep the vehicle speed at 60 mph (97 km/h) or less for the first 500 miles (805 km).
- Do not drive at one constant speed, either fast or slow, for the first 500 miles (805 km). Do not race the engine or make full-throttle starts. Avoid downshifting to brake or slow the vehicle.
- Use the correct gear to maintain the desired road speed without lugging the engine.
- Avoid making hard stops for the first 200 miles (322 km). During this time, the new brakes are not yet broken in. Making hard stops with new brakes can lead to premature wear and early replacement. This guideline should be followed each time new brakes are installed.
- Keep the tires properly inflated for the load carried.
- Check the lubricant levels in the engine and transmission weekly for the first 600 miles (965 km).

Once the break-in period has been met, engine speed and load can be gradually increased.

Fast Idle System

NOTE: If the vehicle has this feature, it is available for use only with cruise control. There are three preset speeds (800, 900, or 1000 rpm) available.

The fast idle system can be used to increase engine idle speed whenever the following conditions are met.

- The brake pedal is not pressed.
- The vehicle must not be moving and the throttle must not be pressed.

Fast Idle Operation

1. To enable the fast idle system, press and release the cruise control ON/OFF switch.
2. For the preset fast idle, press and release the cruise control set switch. This will set the preset fast idle speed.

IMPORTANT: The fast idle system does not have any type of light activation in the instrument panel. The only light that will be illuminated is the cruise indicator.

Any of the following actions will turn off the fast idle system.

- Applying the brake.
- The transmission shifter is moved out of Park (P) or Neutral (N); this will engage the transmission.
- Selecting the cruise control ON/OFF switch when it was previously on.

Engine Coolant

NOTICE

If an improper coolant mixture is used, the engine could overheat and be damaged. The repair cost would not be covered by the warranty. Too much water in the mixture can freeze and crack the engine, radiator, heater core, and other parts.

For the gasoline engine, a 50/50 mixture of clean water and DEX-COOL® coolant should be used. If this mixture is used, nothing else needs to be added. This mixture will—

- give freezing protection down to –34°F (–37°C);
- give boiling protection up to 265°F (129°C);
- protect against rust and corrosion;
- not damage aluminum parts;
- help keep the proper engine temperature.

NOTICE

If extra inhibitors and/or additives are used in the vehicle's cooling system, the cooling system could be damaged. Use only the proper mixture of the engine coolant and water listed here for the cooling system.

Fuel

IMPORTANT: Using the recommended fuel (gasoline) is important for proper maintenance of the engine. To help keep the engine clean and maintain optimum vehicle performance, it is recommended to use gasoline advertised as TOP TIER detergent gasoline. Any resulting engine damage due from the use of unapproved fuel (gasoline) would not be covered by the vehicle warranty.

NOTICE

Do not use ethanol fuel (E85) in the vehicle. The engine is not designed for this fuel, and serious engine damage will result if it is used.

Gasoline Octane

Use regular unleaded gasoline with a posted octane rating of 87 or higher. If the octane rating is less than 87, an audible knocking noise may occur. If this happens, use a gasoline rated at 87 octane or higher as soon as possible. If gasoline rated at 87 octane or higher is being used and a heavy knocking is heard, the engine needs service.

Gasoline Specifications

Gasoline should meet the American Society for Testing and Materials (ASTM) specification D4814 in the United States or CAN/CGSB-3.5 or 3.511 in Canada. Some gasolines contain an octane-enhancing additive called methylcyclopentadienyl manganese tricarbonyl (MMT). The use of gasolines containing MMT is not recommend. Gasoline containing MMT can reduce the life of spark plugs and the performance of the emission control system could also be affected. The malfunction indicator lamp (MIL) might come on if gasoline with MMT is used. If this happens, take the vehicle to a dealer for service.

Additives

To provide cleaner air, all gasoline in the United States is now required to contain additives that help prevent engine and fuel system deposits from forming, allowing the emission control system to work properly. In most cases, you should not have to add anything to the fuel. However, some gasolines contain only the minimum amount of additive required to meet EPA regulations. To help keep fuel injectors and intake valves clean, or if the vehicle experiences problems due to dirty injectors or valves, look for gasoline that is advertised as TOP TIER detergent gasoline.

For those who do not use TOP TIER detergent gasoline regularly, one bottle of GM Fuel System Treatment Plus, added to the fuel tank at every engine oil change, can help clean deposits from fuel injectors and intake valves. GM Fuel System Treatment Plus is the only gasoline additive recommended.

Engine Oil

NOTICE

Use engine oil that is identified as meeting standard GM6094M and showing the American Petroleum Institute (API) starburst symbol. Failure to use the recommended oil can result in engine damage and will void the engine warranty.

When determining the type of engine oil to use, look for the following items.

- Use only an oil that meets standard GM6094M.
- Oil grade SAE 5W–30 is best for the engine. Do not use SAE 10W–40 or 20W–50.
- The API starburst symbol. See **Fig. 16.4**.
- The Dexos 1 Approved-Gen 2 symbol (**for 6.6 L engines**). See **Fig. 16.5**

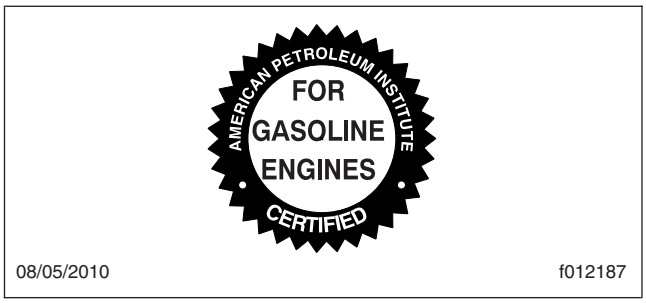

Fig. 16.4, API Symbol



Fig. 16.5, Dexos 1 Approved-Gen 2 Symbol (for 6.6 L engines)

If the vehicle is being operated in an area of extreme cold, the use of SAE 5W–30 oil will provide easier cold starting for the engine.

Engine Oil Additives

Do not add anything to the oil. The recommended oils with the API starburst symbol that meet standard GM6094M are all that is needed for good performance and engine protection.

Engine Oil Flushing

NOTICE

Engine oil system flushing is not recommended and could cause engine damage not covered by the engine warranty.

Checking the Engine Oil

It is important to check the oil regularly and keep it at the proper level. In order to get an accurate reading, the oil must be warm and the vehicle must be on level ground.

1. Turn off the engine and give the oil several minutes to drain back into the oil pan. If this is not done, the oil dipstick may not show the actual level.
2. Pull out the dipstick and clean it with a paper towel or cloth, then push the dipstick back in all the way. Remove it again, keeping the tip down, and check the level.
3. If the oil is below the cross-hatched area at the tip of the dipstick, add at least one quart (liter) of the recommended oil. See **Fig. 16.6**.

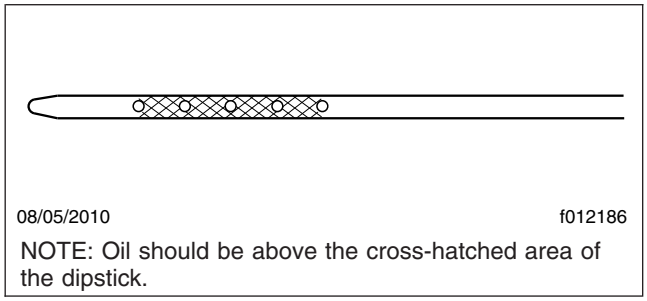

Fig. 16.6, Oil Dipstick

Changing the Engine Oil

The engine oil must be changed as follows:

- 6.0 L engines—every 5000 miles (8045 km)
- 6.6 L engines—every 7500 miles (12 068 km); more frequent oil changes may be required for severe driving conditions

See maintenance operation **01–03** in the *Walk-In Van Chassis Maintenance Manual* for detailed instructions.

Ametek Instrument Panel

The following information describes the Ametek instrument panel, used with gasoline engines. The instrument panel is shown in **Fig. 16.7**.

NOTE: The instrument panel is shown with a standard U.S. speedometer, which shows miles per hour (mph) more prominently than kilometers per hour (km/h).

Message Display Center

The message display is a graphical, backlit, liquid crystal display (LCD) that relays information to the vehicle operator. The messages displayed include:

- Odometer
- Trip Odometer 1/Trip Odometer 2
- Chassis Battery Voltage
- Instantaneous Fuel Rate
- Average Fuel Rate
- Gear Attained Status

- Transmission Temperature
- Hour Meter
- Boost Pressure
- Engine Oil Pressure
- Coolant Temperature
- Fuel Level
- Percent Engine Load
- Engine RPM

During normal operation, the LCD displays the odometer value and chassis battery voltage on the top line, and driver selected parameters, such as the trip odometer and fuel rate, on the second and third lines.

Priority Messages

Priority messages (including warning messages) are displayed in the LCD due to various inputs or data messages. Unless noted otherwise, the priority message will take over the whole screen, allowing multiple messages to be displayed in five second intervals.

Self-Test

When the ignition is turned on, a required self-test automatically begins. Gauge needles will reset to zero during the self-test, and then immediately move to the position dictated by the data received. During this time, the warning lights, alarm (buzzer), and driver display screen will also perform a self-test.

NOTE: The driver can activate or deactivate the start-up self-test by accessing the setup menu.

Menu System

The menu system is shown on the driver display screen once the self-test is finished. The menu system responds to input from the driver and remains active as long as the ignition is on. In order for the driver to operate the menu system, the ignition must be ON, and the park brake must be set (ON). The main features of the menu system are described below.

- Setup—this is used to set various parameters, which are saved when the ignition is turned off. Setup has select display units, startup screen, LCD contrast, and reset parameters.
- Maintenance—shows various maintenance intervals such as engine oil, air filter, etc.
- Diagnostics—this is used for setting and reading inputs and outputs and checking the gauges. It also shows the hardware and software version of the instrument panel, and has menus to retrieve active error codes from the engine, transmission, and ABS controllers.

NOTE: No lines can be highlighted in the menu system screen. To get to the sections that can be highlighted, press the right arrow toggle button and hold it for two seconds. The display screen will change and the options shown can then be highlighted. Once a selection has been chosen and changes are made, press the right arrow toggle button to go back to the main message display screen.

Setup Menu

Select Display Units

The set units screen allows the driver to choose between English or metric units of measurement for the displayed values. To navigate to the set units screen, see **Fig. 16.8**, screens H, I, and J.

Startup Screen

The startup screen selection allows the driver to turn the startup screen on or off.

LCD Contrast

Select contrast from the menu to set the LCD contrast. Use the down toggle button to set the contrast to the desired level. To navigate to the contrast screen, see **Fig. 16.8**, screen M.

Reset Parameters

The reset parameters screen is included with vehicles that have the Allison transmission prognostics feature.

Maintenance Menu

The maintenance menu has the following three sub menus:

- maintenance intervals
- transmission oil life remaining
- transmission oil filter life monitor

Maintenance Intervals

The maintenance intervals menu allows the driver to set the change intervals for engine oil and engine air filter. If the intervals are set to zero, the maintenance warnings must be disabled.

Transmission Oil Life Remaining

If transmission prognostics are enabled, this menu indicates how much useful oil life remains.

Transmission Oil Filter Life Monitor

If transmission prognostics are enabled, the transmission oil filter life monitor tells the driver if the transmission oil filter is clogged and in need of repair. A message will appear on the display screen as TRANS OIL FILTER FUNCTIONAL or TRANS OIL FILTER CLOGGED.

Diagnostic Menu

The diagnostic menu contains the following items:

- engine faults
- transmission faults
- ABS faults
- check outputs
- odometer diagnostics
- check gauges
- check indicators (warning lamps)
- check LCD
- check binary inputs
- check analog inputs
- check datalink
- hardware/software version

All of the items in the diagnostic menu can be accessed by using the toggle buttons and selecting the auxiliary screens. Then navigate to the diagnostic sub-menu. Some of the more frequently used diagnostic menus are described further below.

Engine Faults

This screen displays engine fault codes that are received from the engine electronic control unit (ECU). To navigate to the engine fault screen, see **Fig. 16.9**, screen AA.

Transmission Faults

This screen displays transmission fault codes that are received from the transmission ECU. To navigate to the transmission fault screen, see **Fig. 16.9**, screen AB.

ABS Diagnostics

This screen displays Antilock Brake System (ABS) fault codes that are received from the ABS ECU. To navigate to the ABS diagnostic screen, see **Fig. 16.9**, screen AC.

Check Gauges

The check gauges screen allows the driver to set each gauge as a percentage of scale (either 0, 50, or 100%), as shown in the LCD. To navigate to the check gauges screen, see **Fig. 16.10**, AG screens.

Warning Lamp

The warning lamp screen allows the driver to test each warning lamp (not the vehicle load) on and then off, displaying the lamp name and status in the LCD. To navigate to the warning lamp screen, see **Fig. 16.10**, screen AH.

Check LCD

Selecting the check LCD screen displays the Freightliner Custom Chassis Corporation (FCCC) logo in normal and reverse video three times and then returns to the menu. To navigate to the check LCD screen, see **Fig. 16.10**, screen AI.

Check Binary Inputs

The check binary inputs screen displays the pin number and status of each binary input. The toggle buttons allow the driver to select each binary input. This information is continuously updated to assist in troubleshooting. To navigate to the check binary inputs screen, see **Fig. 16.10**, screen AJ.

Check Analog Inputs

The check analog inputs screen displays the pin number and actual value of each analog input defined in the system. The toggle buttons allow the driver to select each analog input. This information is continuously updated to assist in troubleshooting. To navigate to the check analog input screen, see **Fig. 16.11**, screen AK.

Check Datalink

The check datalink screen allows the driver to view all devices that communicate on the J1939, J1587, and GMLAN datalinks. To navigate to the check datalink screen, see **Fig. 16.11**, screen AL.

Menu Navigation

The menu navigation road maps are provided to illustrate the screens that are available in the menu system. The paths to specific screens are shown, along with instructions for using the toggle buttons to move from one screen to another. Refer to the road maps to change items shown in lines one, two, and three of the display screen, view the setup screens, diagnostics, etc. See **Fig. 16.8**, **Fig. 16.9**, **Fig. 16.10**, **Fig. 16.11**, **Fig. 16.12**, **Fig. 16.13**, **Fig. 16.14**, **Fig. 16.15**, **Fig. 16.16**, **Fig. 16.17**, **Fig. 16.18**, **Fig. 16.19**, and **Fig. 16.20**.

IMPORTANT: Follow the steps below to change the three items (also known as favorites) shown in the message display center. The message display center is referred to as screen C in **Fig. 16.14**.

1. With the vehicle in park, turn the ignition to ON, and allow the self test to complete.
2. Press the down toggle button to select an item to change. The selected item will now be highlighted.
3. Press the right toggle button once to enter the favorites display menu, shown in **Fig. 16.14**, as screen D.
4. Use the down toggle button to scroll through the available items.
5. Highlight the new item, then press the right toggle button. The selected item will now appear in the message display center.

Warning and Indicator Lights

There can be up to 22 warning and indicator lamps (telltales) installed in the dash message center. See **Fig. 16.21**.

The instrument cluster has an emergency buzzer that sounds when serious conditions that require immediate attention occur.

A description of the standard warning and indicator lamps are listed below.

Maintenance Warning

When the maintenance warning lamp illuminates, the message display center will alert the driver as follows:

- Oil Change Required—alerts the driver that the engine has reached the recommended oil change interval.
- Air Filter Reminder—the air filter requires checking or replacement.
- Transmission Prognostics Warning—if the transmission has prognostics enabled.

Left-Turn Indicator

The left-turn indicator flashes on and off when the left-turn signal lights are flashing.

Both turn signal indicators flash when the hazard warning flasher is turned on.

Check Engine Warning

The check engine warning indicator illuminates when certain faults are detected. If a critical engine condition exists (for example, low oil pressure or high coolant temperature), the check engine indicator will illuminate to alert the driver to correct the condition as soon as possible. If the condition gets worse, the stop engine indicator will illuminate.

NOTE: If the check engine indicator illuminates during vehicle operation, take the vehicle directly to an authorized Freightliner service facility.

Stop Engine Warning

The stop engine warning indicator illuminates if a malfunction that could cause engine damage occurs. In most cases, the engine protection warning will illuminate before the stop engine warning. When the stop engine warning indicator illuminates, immediately park the vehicle in a safe location and shut down the engine. Continued operation with the stop engine warning indicator illuminated will lead to automatic engine shutdown and possible engine damage.

Malfunction Indicator Lamp (MIL)

The malfunction indicator lamp (MIL) indicates an engine emissions-related fault. See the engine operation manual for details.

Low Air Pressure Warning

The low air pressure warning indicator and emergency buzzer activate when the engine is turned on if air pressure in the primary or secondary air reservoir is below 65 to 75 psi (448 to 517 kPa), and remain on until air pressure rises above that level in both reservoirs.

Wait to Start Indicator

The wait-to-start indicator lamp illuminates when the intake heater is active. Wait until the indicator light goes off to start the engine.

ABS Warning

The ABS indicator illuminates when there is a malfunction in the vehicle antilock brake system (ABS).

NOTE: For more information about this indicator and the ABS system, see **Chapter 9**.

⚠ WARNING

If the ABS warning lights come on while driving, repair the system immediately to ensure full antilock brake capability. Operating the vehicle when the ABS needs to be serviced could cause an accident, possibly resulting in personal injury or death, or property damage.

Shift Inhibit Indicator

The shift inhibit indicator illuminates when the transmission ECU is prohibiting shifting.

Transmission Overheat Warning

The transmission overheat indicator illuminates when the temperature of the transmission fluid goes above the preset level set by the transmission manufacturer.

For more information, see the transmission manufacturer's manual provided with the vehicle.

Transmission Warning

The transmission warning indicator will activate during vehicle operation (not during start-up) if the electronic control unit (ECU) has signaled a diagnostic code. Diagnostic codes indicate malfunctions in transmission operation. If this indicator stays on continuously during operation, have the transmission serviced as soon as possible.

Right-Turn Indicator

The right-turn indicator flashes on and off when the right-turn signal lights are flashing.

Both turn indicators flash when the hazard warning flasher is turned on.

Fasten Seat Belts Warning

The fasten seat belts warning indicator illuminates for 30 seconds after the ignition switch is turned on.

Hydraulic Brake System Warning

The brake system warning lamp illuminates if there is a hydraulic brake system failure, or if the vehicle is powered and the engine is not running.

Headlight High-Beam Indicator

The high-beam indicator (sideways beam icon) illuminates when the headlight high beams are on.

Parking Brake On Warning

The parking brake on indicator activates when the parking brake is engaged.

If the vehicle is moving at a speed of 2 mph (3 km/h) or more, the emergency buzzer will sound until the parking brake is released.

Cruise Control Indicator

The cruise control indicator illuminates when the cruise control is activated.

Emergency Buzzer

The emergency buzzer sounds during the ignition sequence and whenever one of the following conditions exists:

- The engine oil pressure falls below the preset level which is 6 psi (41 kPa) at 700 rpm, or 18 psi (124 kPa) at 4400 rpm.
- The air pressure falls below the preset level, which is 65 psi (448 kPa).
- The parking brake is set with the vehicle moving at a speed greater than 2 mph (3 km/h).
- The coolant temperature rises above 253°F (123°C) and the check engine and stop engine lights illuminate. When the coolant temperature falls below 244° (118°C) the emergency buzzer and stop engine light will turn off.

NOTE: The check engine light will remain on until the vehicle is inspected at an authorized Freightliner service facility.

Speedometer and Tachometer

Speedometer

Three kinds of speedometer faces are available. The U.S. version of the speedometer registers speed in both miles per hour (mph) and kilometers per hour (km/h), with mph in larger numbers. See **Fig. 16.22**.

The NAFTA version (not shown) of the speedometer face reverses this arrangement, with km/h in larger numbers. The metric-only version (not shown) shows km/h exclusively.

Tachometer

The tachometer indicates engine speed in revolutions per minute (rpm) and serves as a guide for shifting the transmission and keeping the engine in the appropriate rpm range. See **Fig. 16.22**.

Standard Instruments

Fuel Level Gauge

The fuel level gauge indicates the level of fuel in the fuel tanks. See **Fig. 16.23**. A low-level warning light illuminates when the fuel level registers 1/8th of capacity.

Engine Oil Pressure Gauge

NOTICE

A sudden decrease or absence of oil pressure may indicate mechanical failure. Bring the vehicle to a safe stop and investigate the cause to prevent further damage. Do not operate the engine until the cause has been determined and corrected.

If the engine oil pressure falls below preset levels, the check engine warning lamp will illuminate. If the condition does not improve, both the check engine warning lamp and low oil pressure warning lamp will illuminate and the buzzer will sound. See **Fig. 16.24**. At this point, the engine will derate or shut down, depending on the type of engine protection system installed.

Coolant Temperature Gauge

NOTICE

A sudden increase in coolant temperature may indicate engine or cooling system failure. Bring the vehicle to a safe stop and investigate the cause to prevent further damage. Do not operate the engine until the cause has been determined and corrected.

During normal engine operation, the coolant temperature gauge should read 200 to 205°F (93 to 96°C). See **Fig. 16.25**. If the temperature remains below 160°F (71°C) or exceeds 235°F (113°C), inspect the cooling system to determine the cause. See the vehicle workshop manual for troubleshooting and repair procedures.

The coolant temperature gauge is very important. See **Fig. 16.25**. If the coolant temperature rises above 253°F (123°C), the check engine and stop engine lights will illuminate, and the buzzer will sound. At this point, the engine will derate and idle speed will increase, to speed up the cooling fan and water pump to cool the engine.

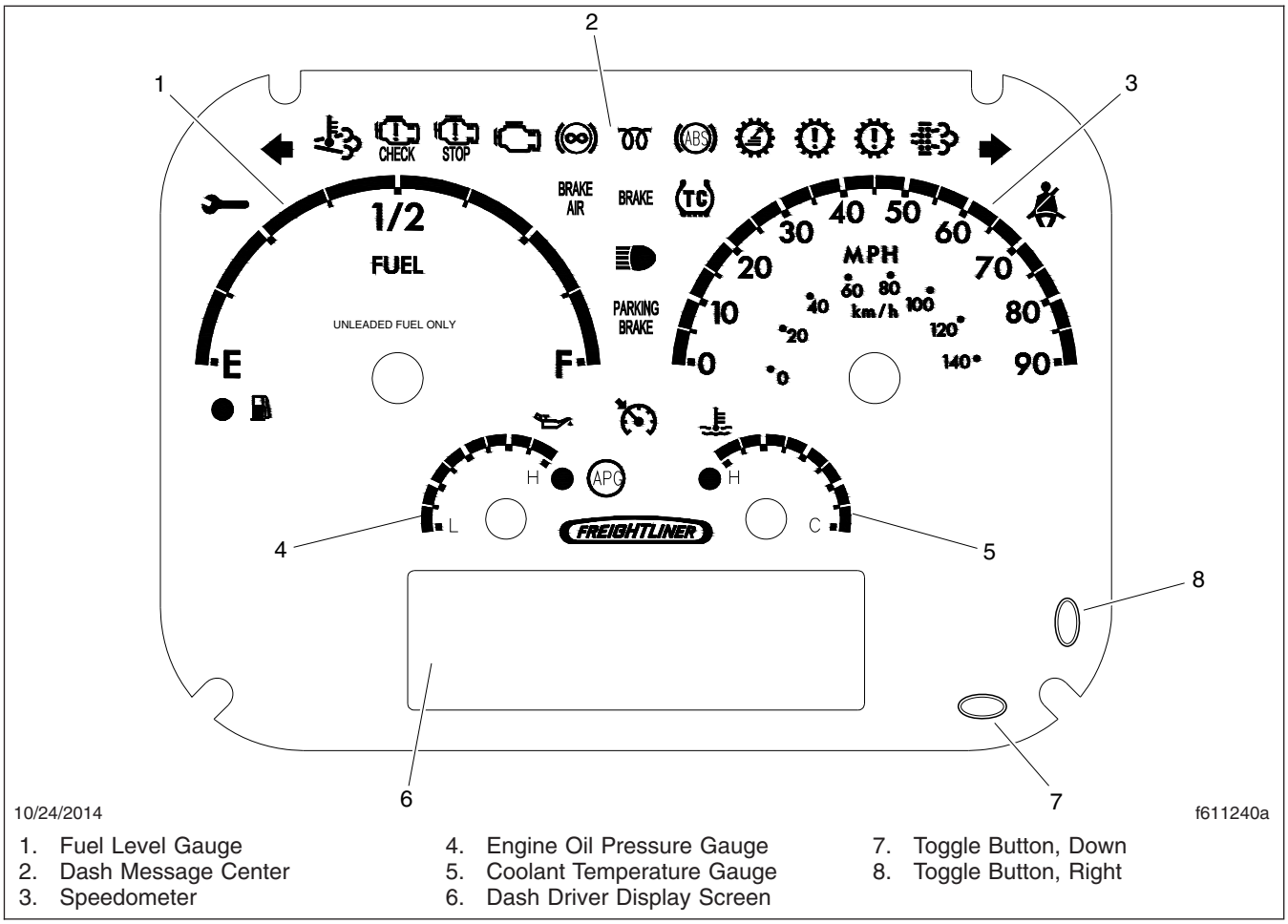

1. Fuel Level Gauge
2. Dash Message Center
3. Speedometer
4. Engine Oil Pressure Gauge
5. Coolant Temperature Gauge
6. Dash Driver Display Screen
7. Toggle Button, Down
8. Toggle Button, Right

Fig. 16.7, Gauge Layout (typical, U.S.)

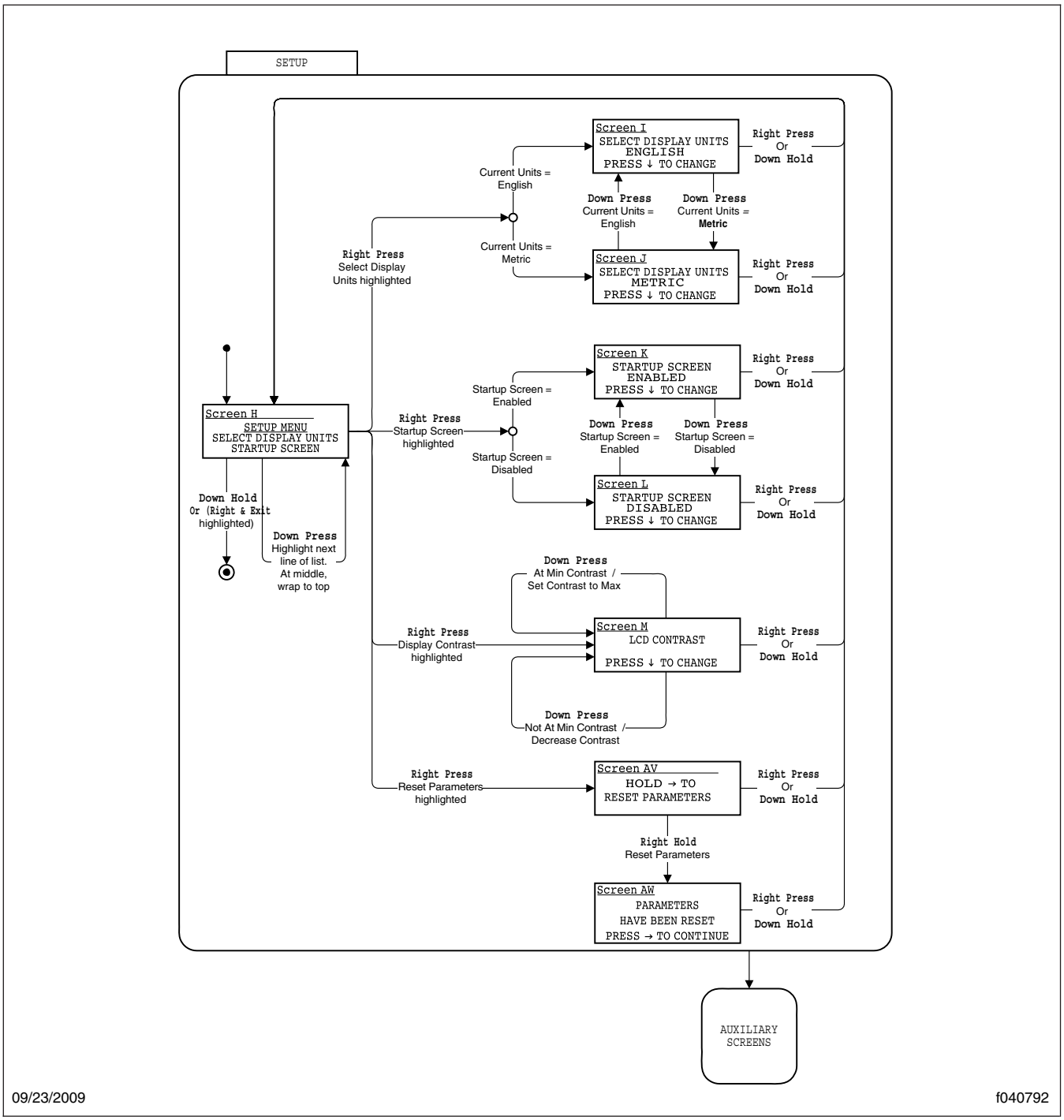

Fig. 16.8, Setup Menu Screens

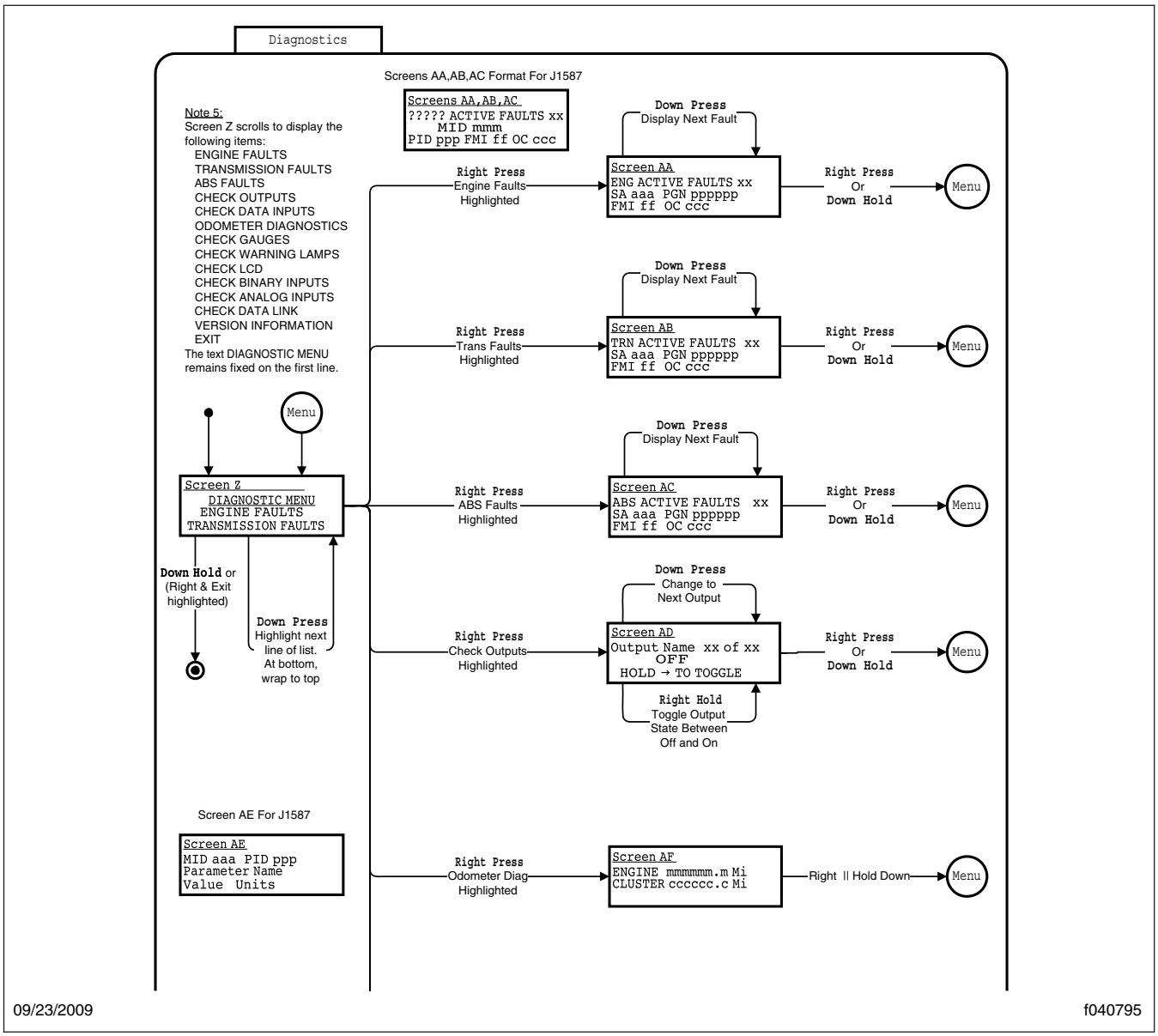

Fig. 16.9, Diagnostic Menu Screens, Screen 1

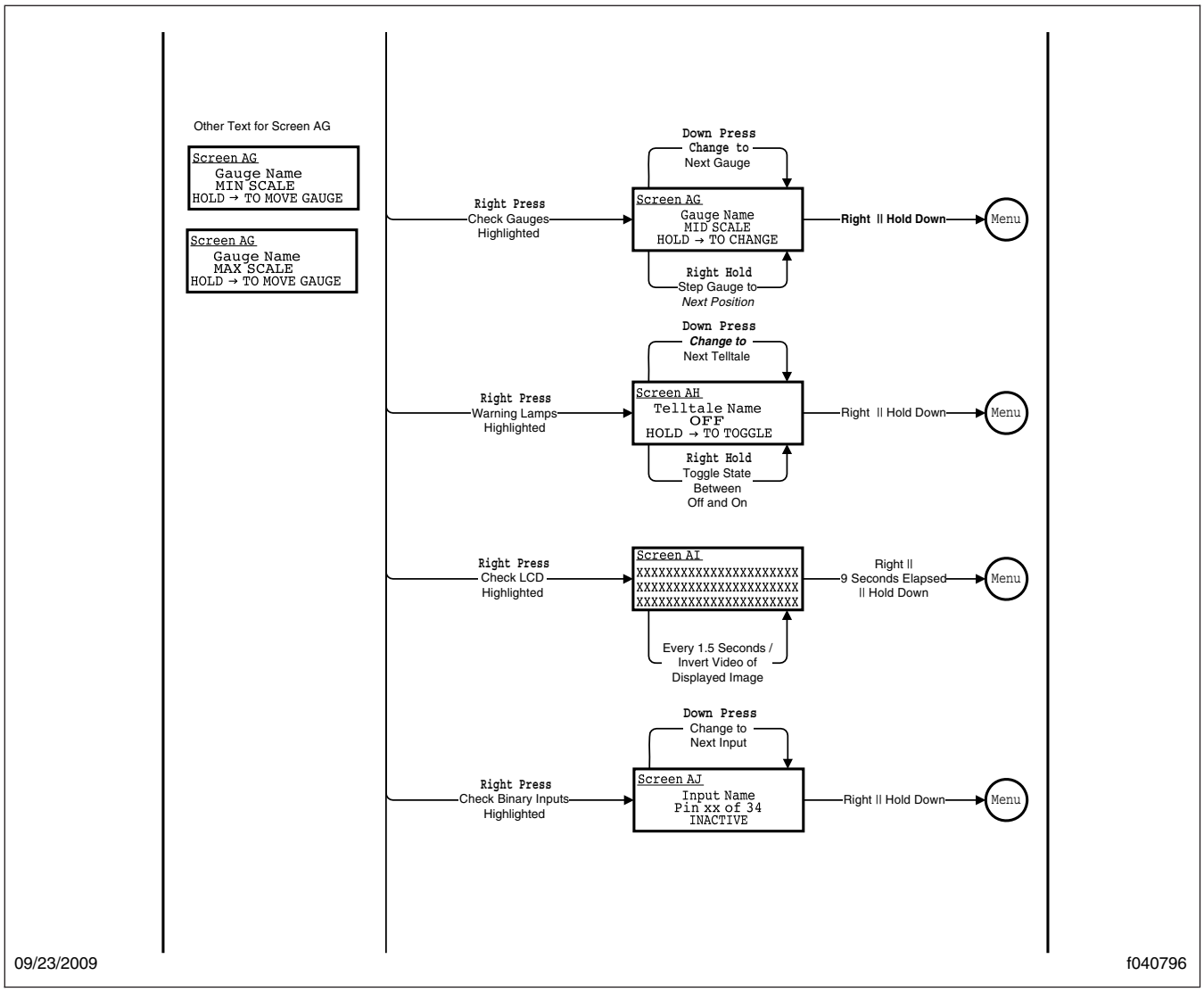

Fig. 16.10, Diagnostic Menu Screens, Screen 2

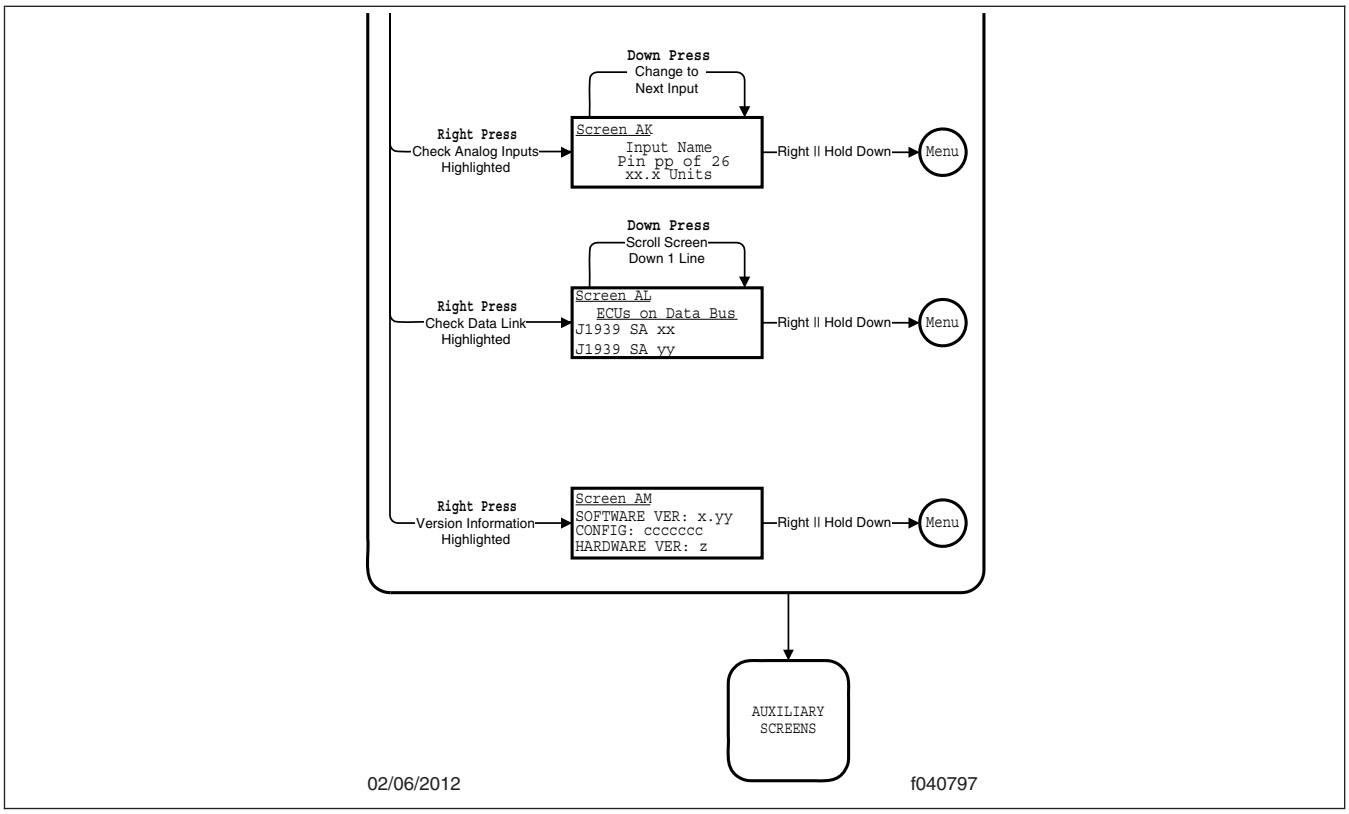

Fig. 16.11, Diagnostic Menu Screens, Screen 3

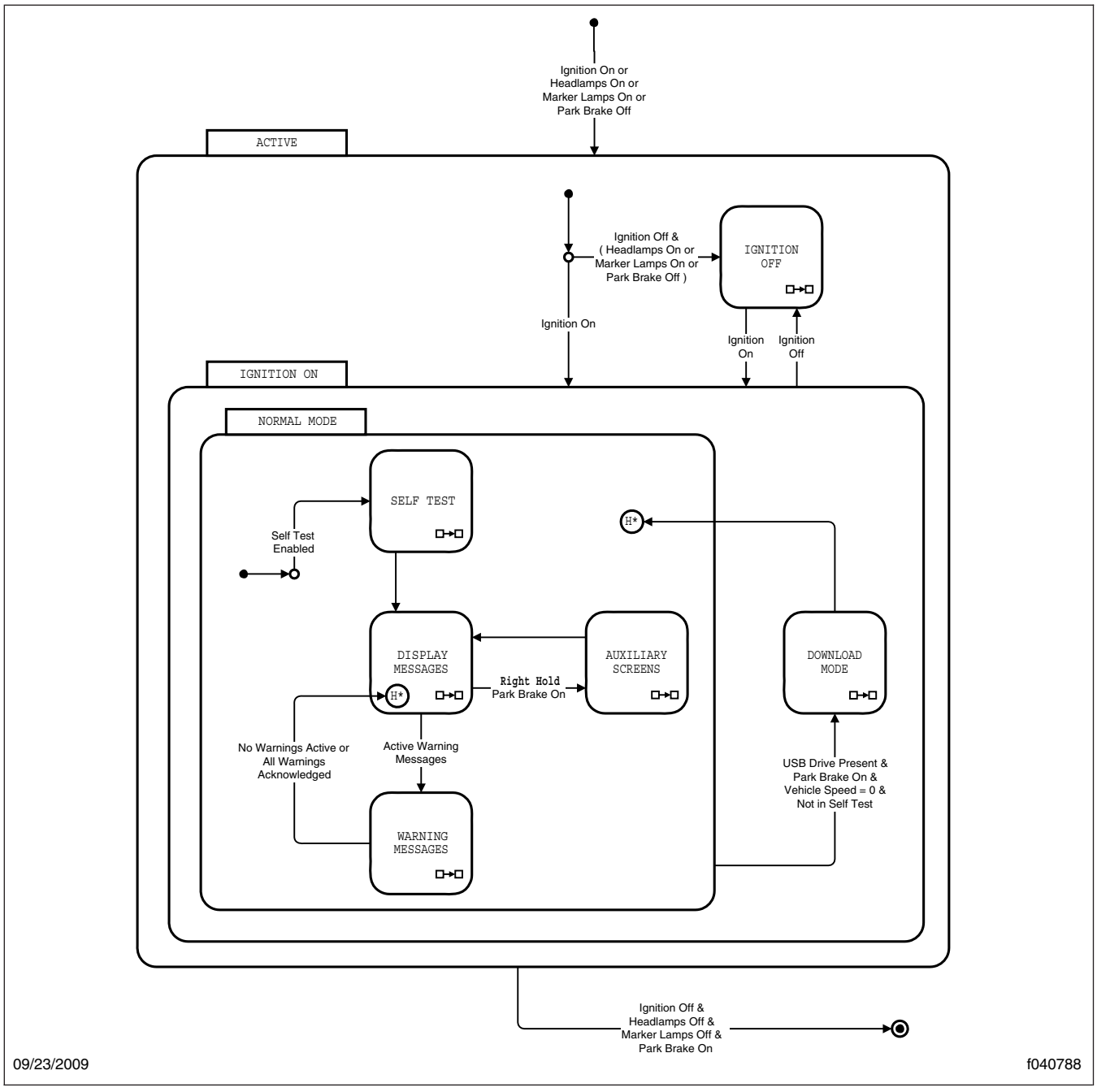

Fig. 16.12, Ignition On, Normal Mode

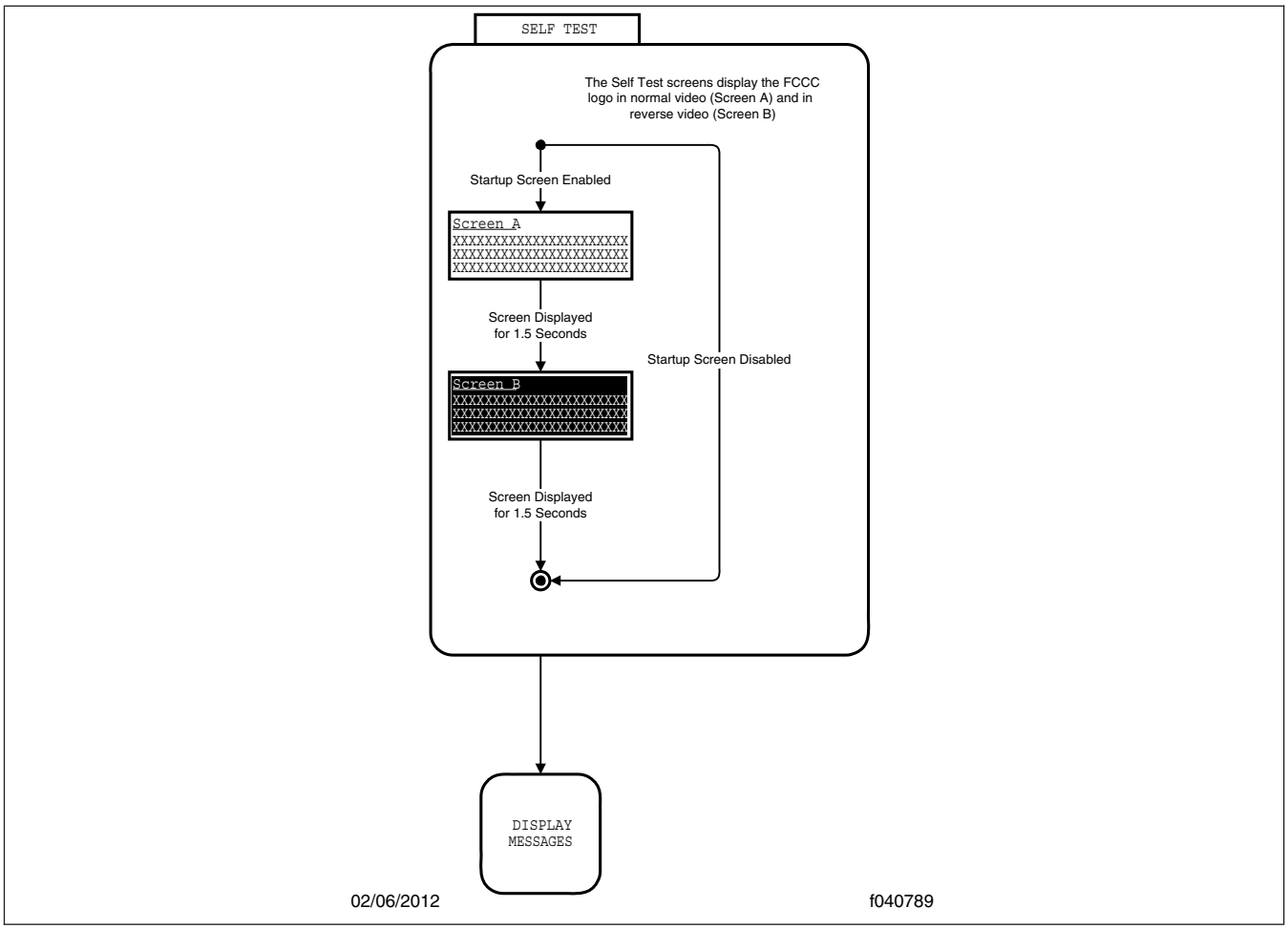

Fig. 16.13, Self Test

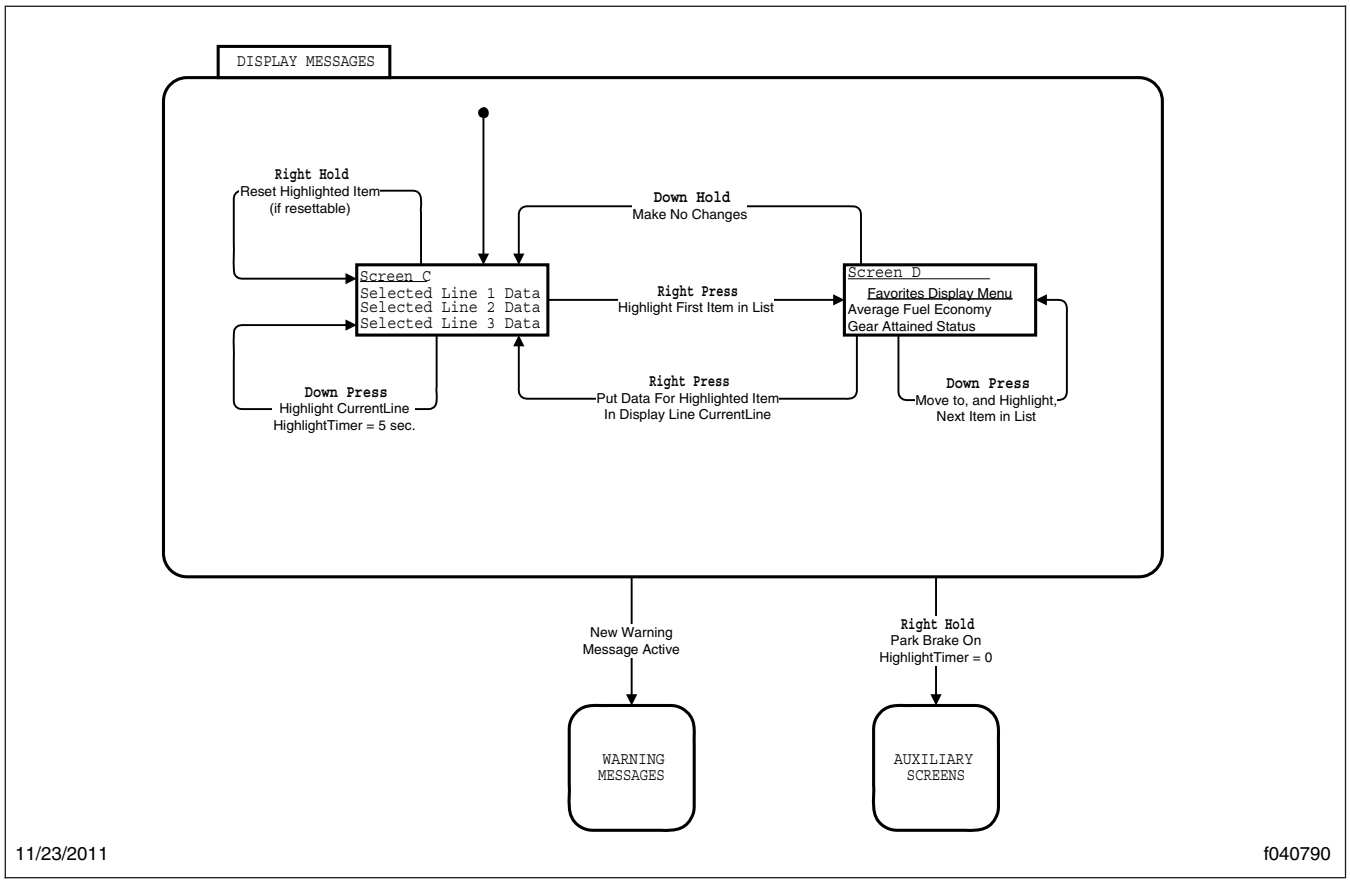

Fig. 16.14, Display Messages

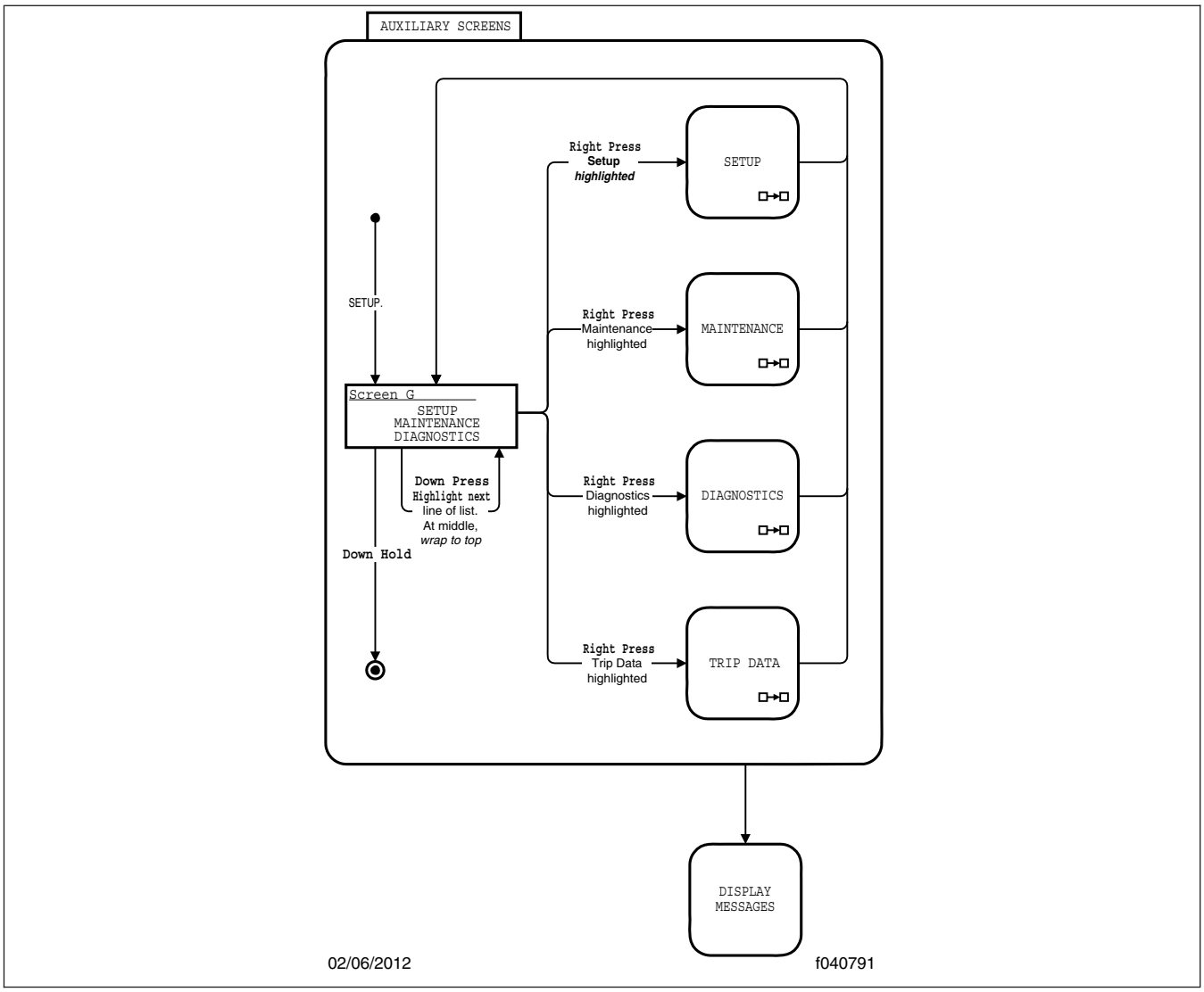

Fig. 16.15, Auxiliary Screens

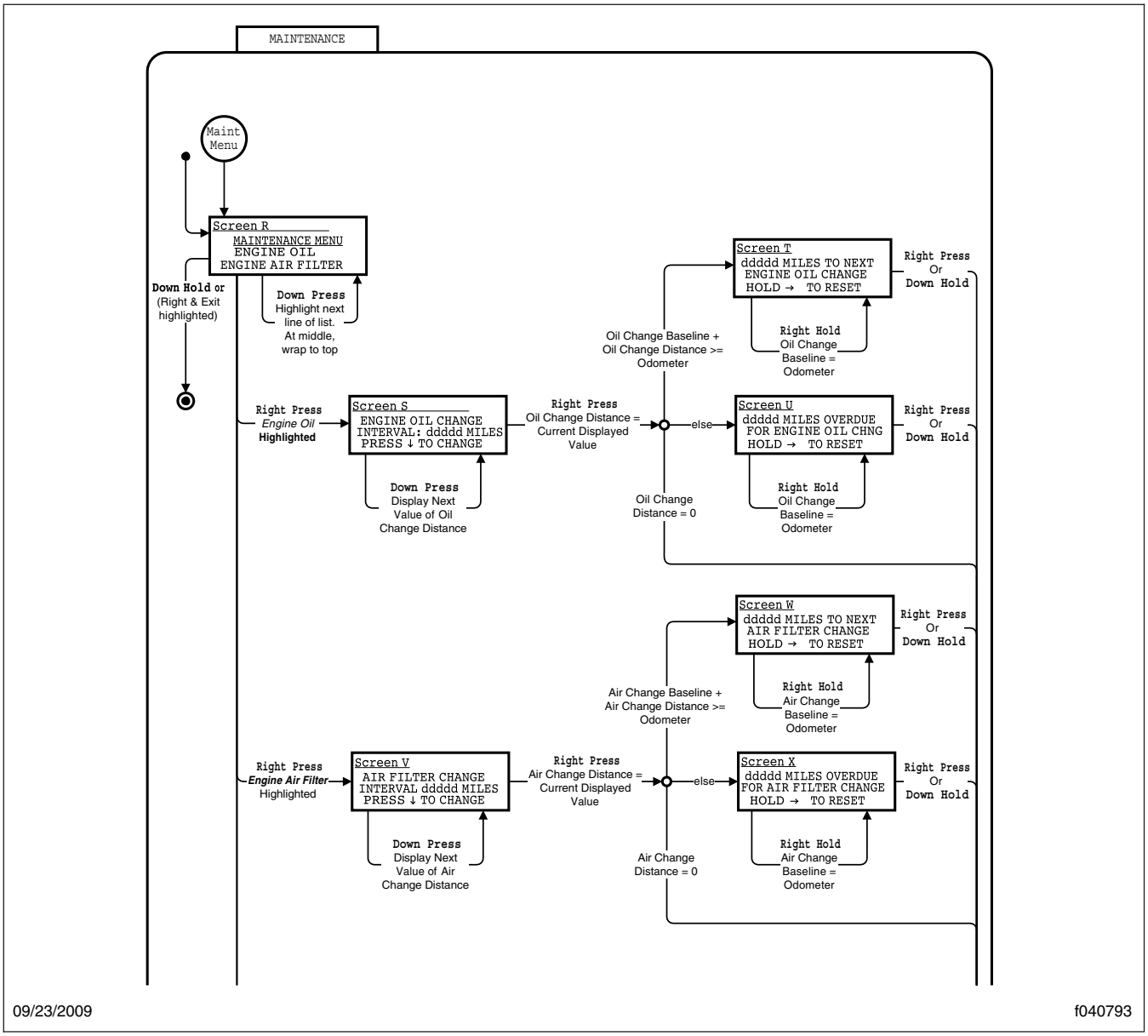

Fig. 16.16, Maintenance Menu Screens, Screen 1

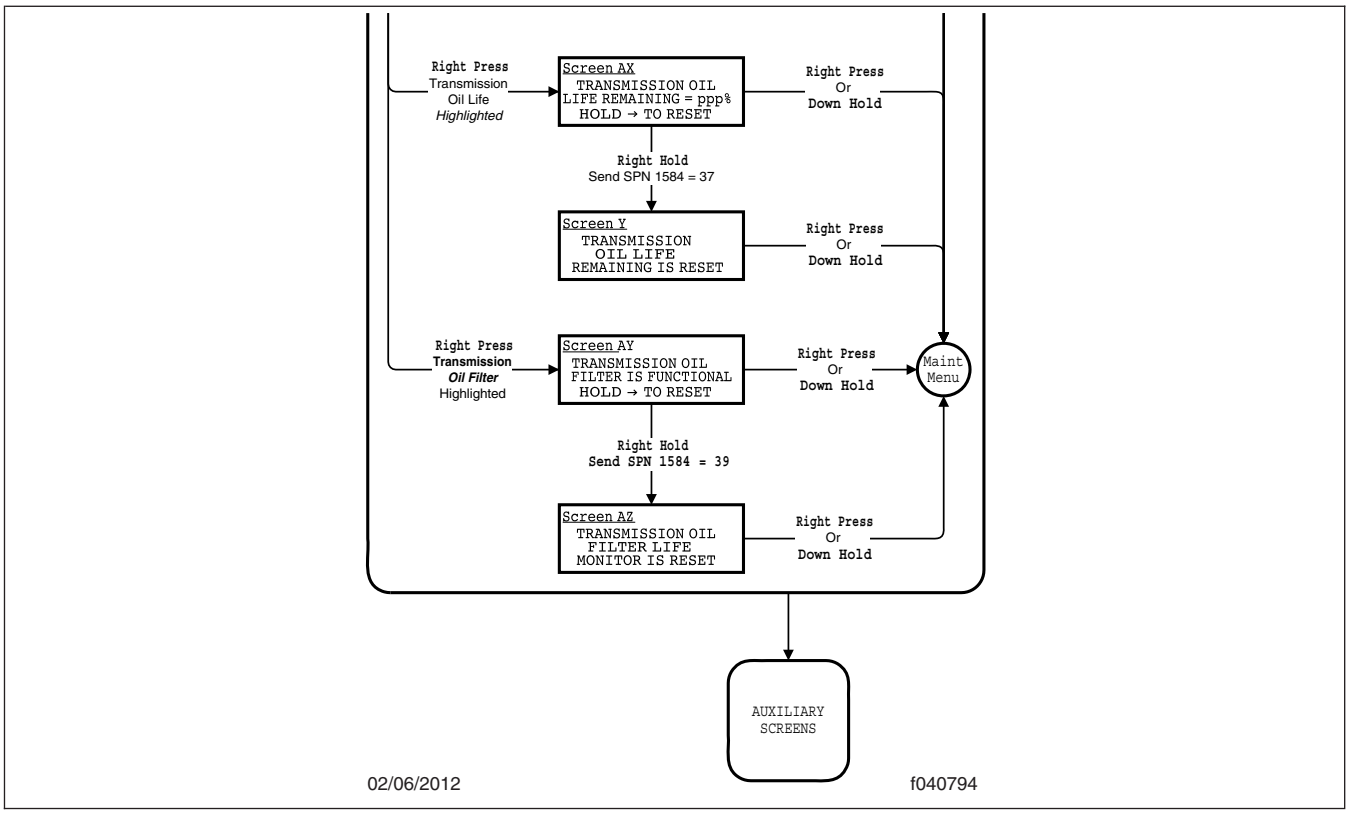

Fig. 16.17, Maintenance Menu Screens, Screen 2

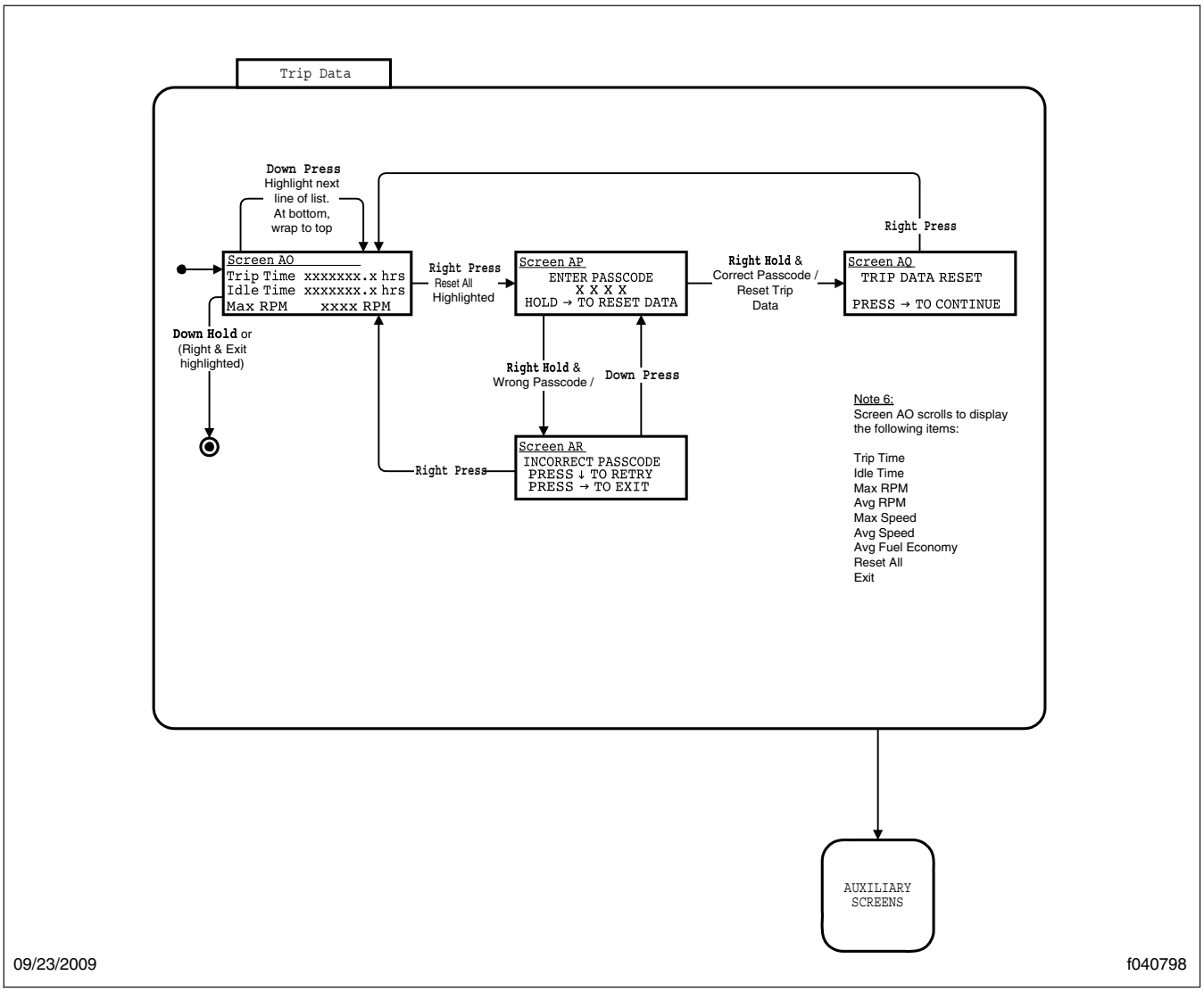

Fig. 16.18, Trip Data

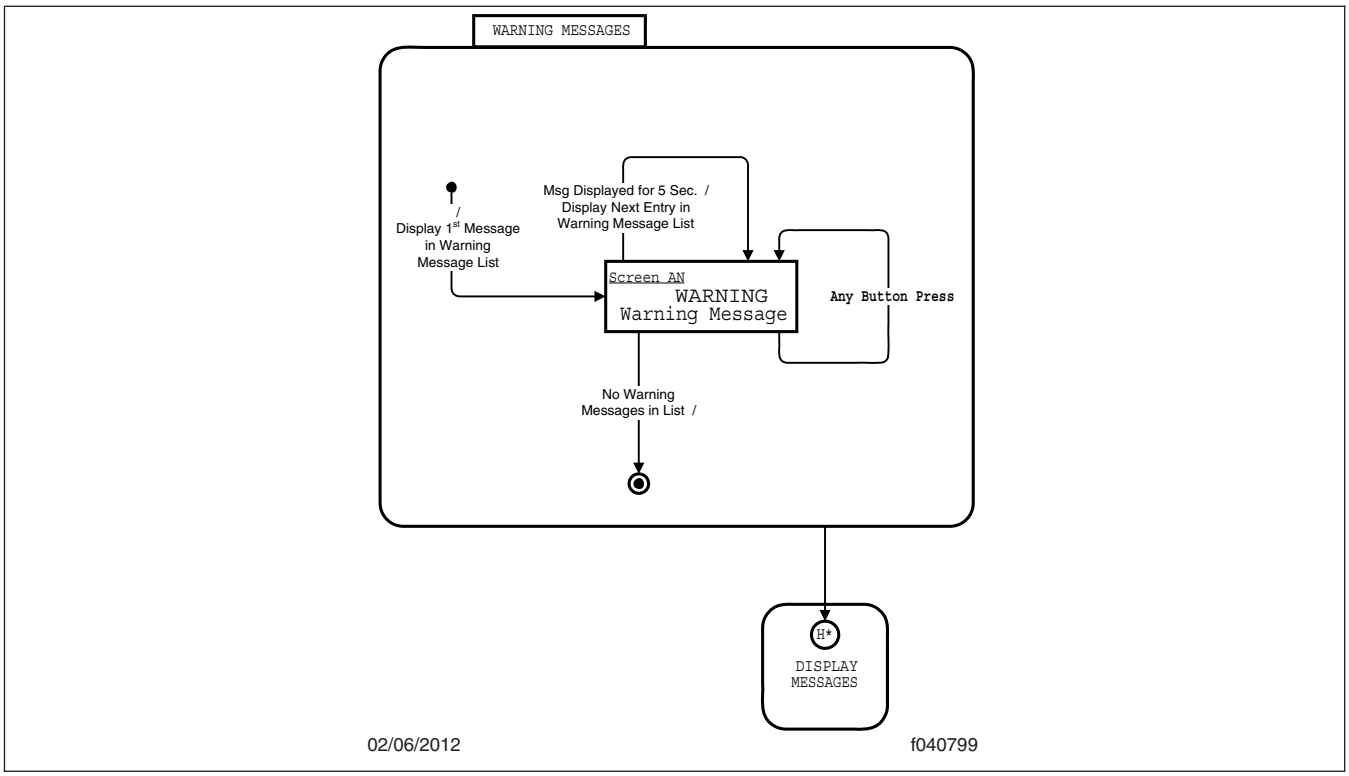

Fig. 16.19, Warning Messages

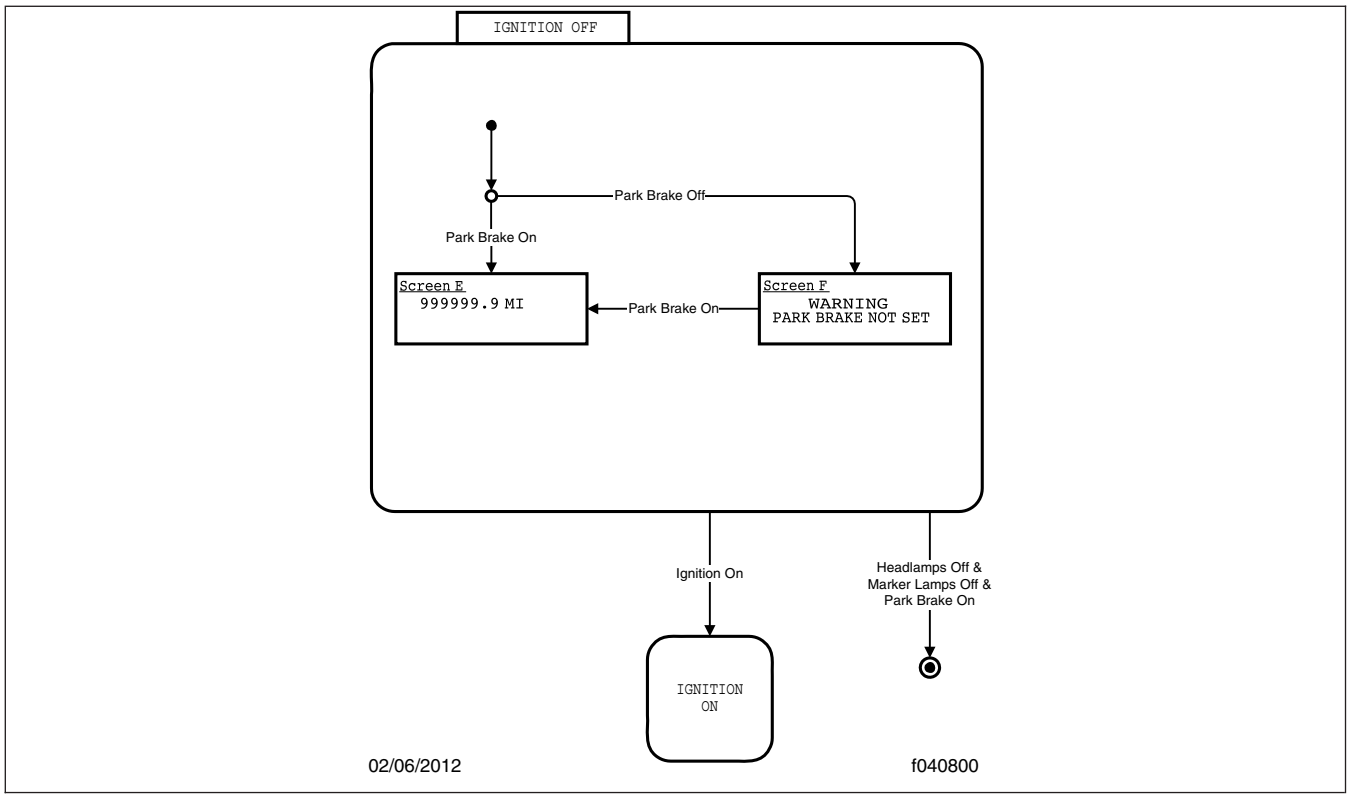

Fig. 16.20, Ignition Off (shown when ignition is keyed OFF)

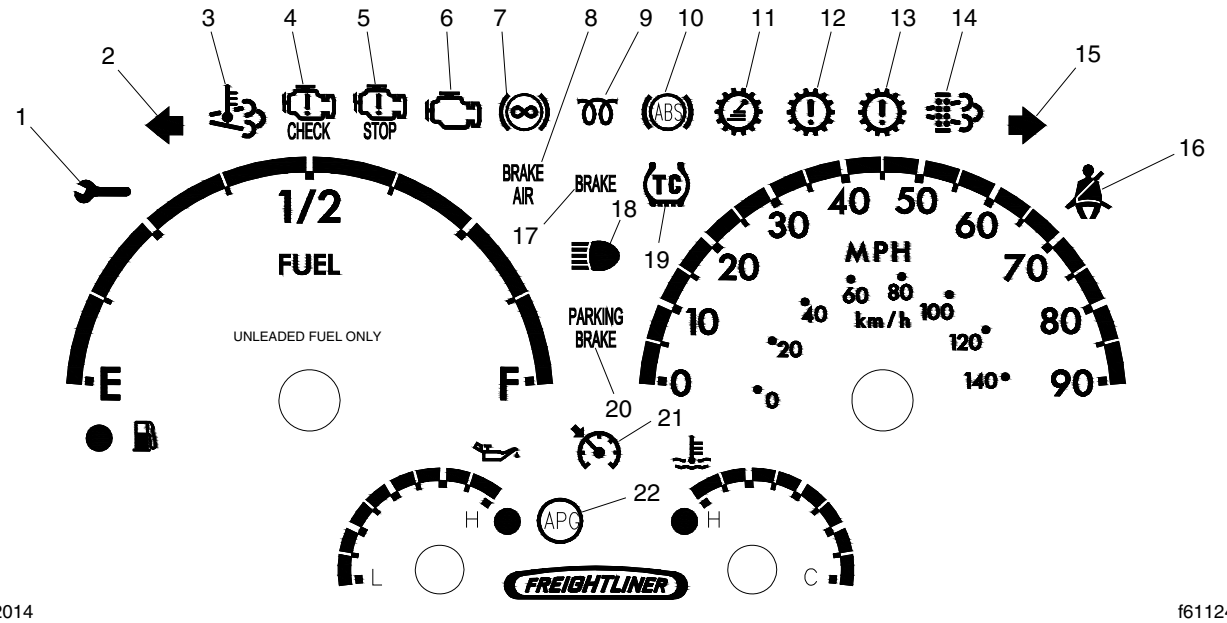

1. Maintenance Warning
2. Left-Turn Indicator
3. High Exhaust System Temperature (HEST) Lamp (not used)
4. Check Engine Warning
5. Stop Engine Warning
6. Malfunction Indicator Lamp (MIL)
7. Engine Brake Indicator (not used)
8. Low Air Pressure Warning
9. Wait to Start Indicator
10. ABS Warning
11. Shift Inhibit Indicator
12. Transmission Overheat Warning
13. Transmission Warning
14. Diesel Particulate Filter (DPF) Lamp (not used)
15. Right-Turn Indicator
16. Fasten Seat Belts Warning
17. Hydraulic Brake System Warning
18. Headlight High-Beam Indicator
19. Traction Control Indicator (not used)
20. Parking Brake On Warning
21. Cruise Control Indicator
22. Auxiliary Power Generator (not used)

Fig. 16.21, Gasoline Engine Warning and Indicator Lamps

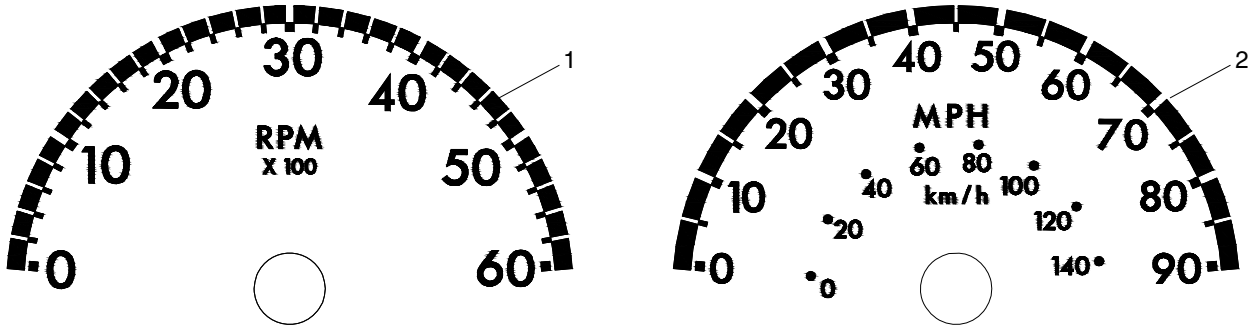

1. Tachometer (optional)
2. Speedometer

Fig. 16.22, Speedometer and Tachometer (U.S. version)

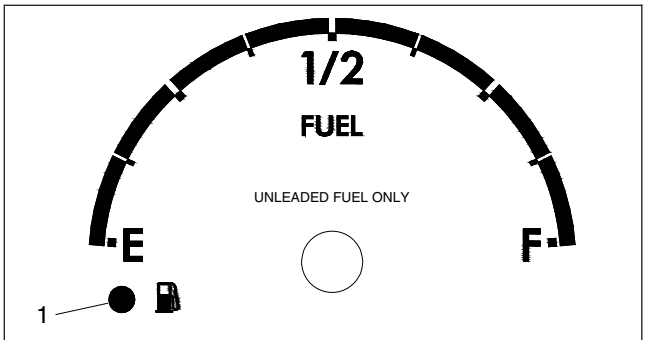

1. Low Fuel Level Warning Lamp

Fig. 16.23, Fuel Level Gauge (typical gauge shown)

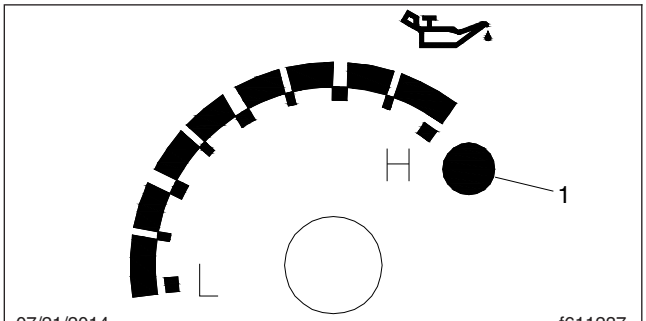

1. Low Oil Pressure Warning Lamp

Fig. 16.24, Engine Oil Pressure Gauge

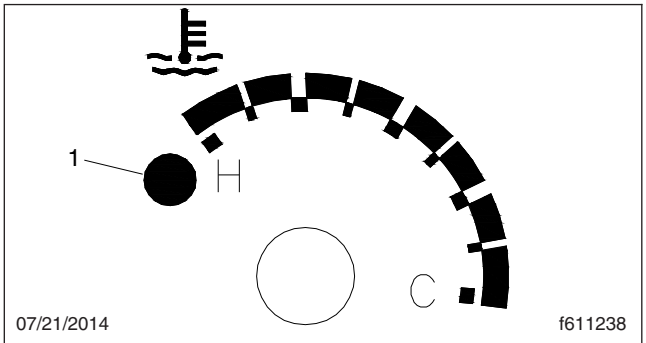

1. High Coolant Temperature Warning Lamp

Fig. 16.25, Coolant Temperature Gauge

17

Electric Vehicle

Electric Vehicle System Overview 17.1
Charging the High-Voltage Batteries 17.3
Motor Starting and Shutdown 17.4
Controls 17.5
Speedometer 17.6
OptiView™ Instrument Panel 17.6
Towing 17.11
Jumpstarting 17.11

Electric Vehicle System Overview

NOTE: The information provided in this chapter is specific to the electric vehicle. Chapters in this manual other than the engine and transmission chapters also apply to the electric vehicle.

⚠ DANGER

Service and repair of the electric vehicle should only be performed by technicians that have completed HV3 Daimler Safety Training. To prevent personal injury or death, or damage to the electric system, do not attempt repairs yourself.

The Walk-In Van Electric Vehicle uses a low-voltage lead acid battery pack and a high-voltage lithium-ion battery pack. The low-voltage battery pack uses 12V lead acid batteries for startup. The high-voltage lithium-ion DC-DC converter uses energy from the high-voltage battery to power auxiliary components such as the headlights, power steering, and windshield wipers.

The high-voltage battery pack provides power to the propulsion motor that moves the vehicle. The high-voltage battery pack also charges the low-voltage battery pack through the DC-DC converter. The vehicle must be plugged to a charger in order to charge the high-voltage battery pack. If the battery check light illuminates, contact an authorized Freightliner dealer.

Additionally, the vehicle system can extend the vehicle range through regenerative braking. Induction from the drive motor being turned into a generator from the kinetic energy created by the forward momentum of the vehicle, simultaneously decelerates the vehicle and recharges the batteries when the driver's foot is off of the accelerator pedal. For further details, see 'Regenerative Braking' in this section.

NOTE: If the outside temperature is -13°F (-25°C) or less, the high-voltage battery pack may freeze, and it cannot be charged or provide power to run the vehicle. Move the vehicle to a warmer location.

NOTICE

To prevent damage to the lithium-ion battery, adhere to the following guidelines:

- The ambient operating temperature range for the high-voltage battery pack is -22 to 131°F (-30 to 55°C).
- The maximum ambient storage temperature range is -40 to 140°F (-40 to 60°C). To maximize life of the battery cells, the recommended storage range is -4 to 68°F (-20 to 20°C).
- While driving, battery cell temperature can be between -22 to 131°F (-30 to 55°C). To maximize life of the battery cells, the recommended temperature range while driving is 59 to 95°F (15 to 35°C). Battery discharge and regen capability may be derated when driving outside the recommended temperature range.
- When charging the high-voltage battery pack, the cell temperature can be between -4 to 131°F (-20 to 55°C). To maximize life of the battery cells, the recommended temperature range when charging the high-voltage battery pack is 68 to 95°F (20 to 35°C). Battery charging capability may be derated when charging outside the recommended temperature range.
- Do not use the lithium-ion battery for any purpose other than vehicle operation.

The capacity of the high-voltage battery pack to hold a charge will decrease with time and usage. As the battery pack ages and capacity decreases, the driving range of the vehicle will decrease. This is normal and does not indicate a defect in the high-voltage battery.

Battery pack tests have estimated that battery capacity will be approximately 80% of original capacity after six years—this is only an estimate. This percentage may vary, and could be significantly lower, depending on individual vehicle and high-voltage battery pack usage. The high-voltage battery pack has limited service life. When the battery pack reaches a specific level, the electric vehicle system warning light will illuminate. Owners should take the vehicle to an authorized Freightliner dealer for inspection and possible battery replacement.

Safety Information

⚠ DANGER

Electric vehicles are equipped with a high-voltage system. Do not attempt any type of electrical work on the vehicle unless you have completed HV3 Daimler Safety Training. Failure to do so could cause severe personal injury or death.

⚠ DANGER

Modifying the electric vehicle could affect the vehicle's electrical system, stability, or other important functions. The electric powertrain should not be modified under any circumstances. Modification of any components will void the warranty. Failure to do so could cause severe personal injury or death.

Warning labels are attached to high-voltage vehicle components. Some examples are shown in Fig. 17.1. Do not attempt any type of work on these components unless you have completed HV3 Daimler Safety Training.



03/19/2020 f547135

Fig. 17.1, High-Voltage Warning Labels

IMPORTANT: Connecting to an unapproved controller area network (CAN) bus may trigger CAN fault codes. The vehicle warranty does not cover failures or damage caused to the CAN bus components when the failure or damage is a result of improper connections to the CAN bus.

Fire Extinguisher

Ensure that an approved fire extinguisher is well secured under the driver's seat within the driver's reach, and easily accessible for first responders. Routinely check the fire extinguisher according to manufacturer's instructions. If the fire extinguisher has been used, it must be replaced with a new fire extinguisher or refilled before the truck can be returned to service.

During a fire, certain plastic seals can produce gases which with water, form a corrosive acid. Do not touch any fluid on the vehicle. In the event of a vehicle fire, do the following:

- Call 911 to report the fire.
- Create a safety perimeter of at least six feet around the vehicle.
- If possible, follow the high-voltage shutdown procedure. This can only be done by someone that has completed the HV3 Daimler Safety Training.

Welding

⚠ DANGER

Service and repair of the electric vehicle should only be performed by technicians that have completed HV3 Daimler Safety Training. To prevent personal injury or death, or damage to the electric system, do not attempt repairs yourself.

The vehicle warranty does not cover damage to electrical components caused by any type of welding. Electrical components closer than 12 inches (30 cm) from the welding site must be removed from the vehicle.

If welding must be performed on the electric vehicle, it should be done by a technician that has completed the HV3 Daimler Safety Training, and the high voltage shutdown procedure must be completed.

High-Voltage System

⚠ DANGER

If a collision occurs, do not touch any high-voltage cables, connectors, or components. Failure to do so could cause severe personal injury or death.

⚠ DANGER

Service and repair of the electric vehicle should only be performed by technicians that have completed HV3 Daimler Safety Training. To prevent

personal injury or death, or damage to the electric system, do not attempt repairs yourself.

The high-voltage system on this vehicle has no parts that an owner or unauthorized service technician can service. Under no circumstances should you open or tamper with the battery or other high-voltage components.

Low-Voltage System

The cab system of the electric vehicle operates on 24V while other areas operate on 12V. When replacing or fitting electrical or electronic components, always verify that they are suitable for the system voltage.

⚠ WARNING

Always disconnect the battery negative (ground) cable before carrying out repairs or service on the electrical system.

Before attempting any work on the batteries or the electrical system, remove all jewelry. If metal jewelry or other metal contacts with electrical circuits, a short circuit may occur causing electrical system failure and damage or personal injury.

Regenerative Braking

This vehicle is equipped with a regenerative braking system. Induction from the drive motor being turned into a generator from the kinetic energy created by the forward momentum of the vehicle, simultaneously decelerates the vehicle and recharges the batteries when the driver's foot is off of the accelerator pedal. When the brake pedal is depressed, regenerative braking is automatically blended with the mechanical braking.

The regeneration will feel as if the brake is being lightly applied when the driver removes their foot from the accelerator pedal. The full power of the service brake is always available to the driver, and regenerative braking is automatically shut off during an antilock brake system (ABS) event.

Charging the High-Voltage Batteries

IMPORTANT: The following battery charging instructions are used with the Proterra battery charging dispenser. If another battery charging dispenser is used, refer to the manufacturer's instructions to charge the vehicle batteries.

Perform the following steps to charge the high-voltage vehicle batteries.

1. Park the vehicle near the battery charging dispenser, turn the ignition key to the OFF position, and set the parking brake.

NOTE: Mounting locations for the battery disconnect switch may vary.

2. Ensure that the battery disconnect switch is in the ON position. The disconnect switch must be in the ON position in order to charge the high-voltage batteries.
3. Open the charge port door. See **Fig. 17.2**.

NOTICE

Open the upper charge port cover first, then open the lower charge port cover; the upper charge port cover overlaps the lower cover. The covers may be damaged or broken if the lower charge port cover is opened first.

4. Open the upper charge port cover first, then open the lower charge port cover. See **Fig. 17.2**, items 2 and 3.
5. Plug the power feed connector into the charge port. Push hard until a 'click' sound is made. See **Fig. 17.3**.
6. The green light above the charge port will begin to flash, indicating the batteries are being charged.

   The battery charging icon illuminates in the center of the speedometer during charging. It can take up to 10 seconds before the icon illuminates.
7. The battery charging dispenser has a lamp to indicate the charging status. See **Table 17.1**.
8. Once battery charging is complete, or to end a charging session, press the end charge button either on the vehicle charging port, shown in **Fig. 17.2**, item 2, or on the battery charging dispenser, shown in **Fig. 17.4**, item 3, then wait 15 seconds.
9. After waiting 15 seconds, ensure that the green light above the charge port is flashing rapidly. Then press the release button to disconnect the power feed connector. See **Fig. 17.5**.

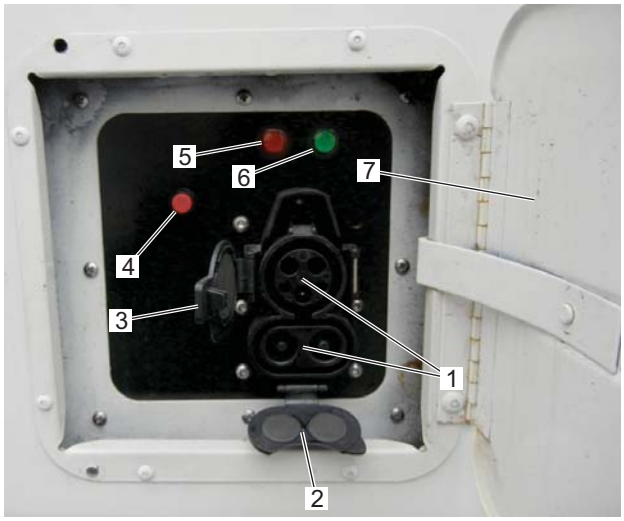

04/07/2021 f547137

1. Charge Port
2. Lower Charge Port Cover
3. Upper Charge Port Cover
4. End Charge Button - press when charging is complete.
5. Red LED - indicates a problem with the charger connection.
6. Green LED - flashes when charging; remains solid when charging is complete.
7. Charge Port Door

Fig. 17.2, Vehicle Charge Port

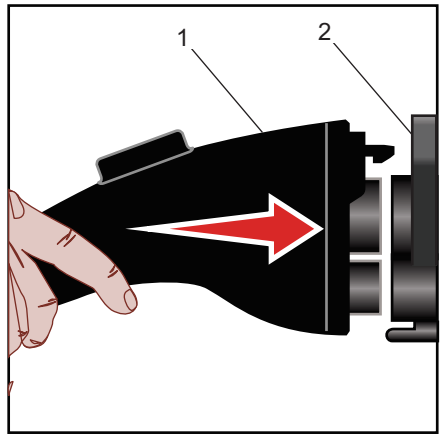

03/19/2020 f547140

1. Power Feed Connector
2. Charge Port

Fig. 17.3, Plugging the Power Feed Connector into the Charge Port

Battery Charging Dispenser Lamp Legend	
Lamp Color	**Description**
White	Available to charge the vehicle.
Green (communication)	Solid - charging dispenser is plugged up but not communicating with the vehicle.
	Flashing - charging dispenser is communicating with the vehicle.
Blue (charging)	Flashing - batteries are being charged.
	Solid - batteries charged to 100% capacity.
Red	Out of service.

Table 17.1, Battery Charging Dispenser Lamp Legend

Motor Starting and Shutdown

Starting

NOTE: When the charger is plugged into the vehicle, the battery charging icon illuminates in the center of the speedometer. During this time, the gearbox can not be shifted and the motor is not enabled.

1. Disconnect the vehicle charging cable, if connected.
2. Set the parking brake, if it is not already engaged.

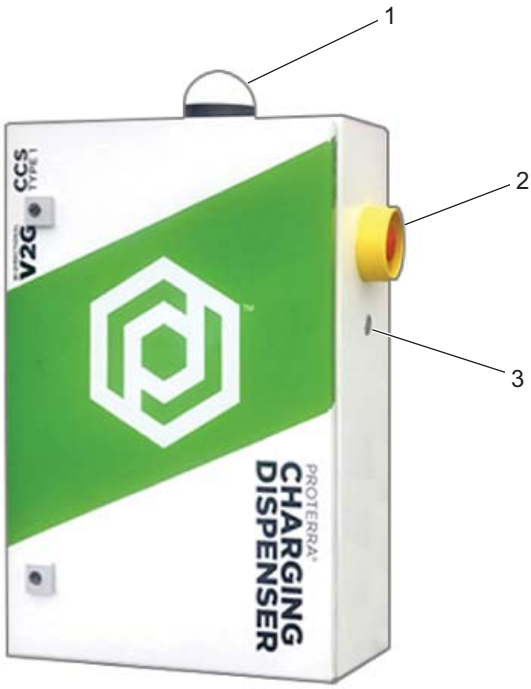

03/19/2020 f547139

1. Charge Dispenser Status Lamp
2 E-Stop Button (for emergency only)
3. End Charge Button

Fig. 17.4, Battery Charging Dispenser

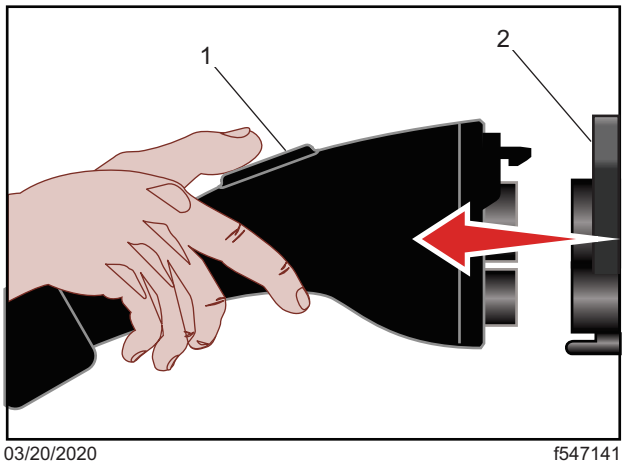

03/20/2020 f547141

1. Release Button 2. Charge Port

Fig. 17.5, Removing the Power Feed Connector

3. Press the brake pedal and turn the key fully clockwise to the START position. After the system emits a single 'chirp', release the key.
4. The system will run a self-check and activate.
5. After the system emits a double 'chirp', the ready to move indicator appears in the bottom-left of the instrument panel and briefly in the middle of the speedometer, indicating the vehicle is ready to be driven. See **Fig. 17.6**.



03/10/2021 f611927

Fig. 17.6, Ready to Move Indicator

6. Apply the service brake, then release the parking brake.
7. With the service brake applied, select the desired gear on the multifunction gear control—located on the right side of the steering column—to put the vehicle in gear, then slowly release the service brake. For multifunction gear control information, see **Chapter 5**.

Shutdown

1. With the vehicle stopped, place the gearbox in neutral (N).
2. Set the parking brake.
3. Turn the key to the OFF position.

IMPORTANT: Do not leave the key in the ignition, even in the OFF position. It may drain the 12V batteries.

4. Remove the key from the ignition switch.
5. The system will run a self-check and disable itself.

NOTE: When the key is removed from the ignition, the high voltage is shutoff, but the instrument panel may remain on for several seconds. The powertrain coolant pump may run for approximately eight minutes after shutdown.

Controls

Multifunction Gear Control

The gear box is controlled by a multifunction control on the steering column, shown in **Fig. 17.7**. It is used to select the gear and control the regenerative braking function.

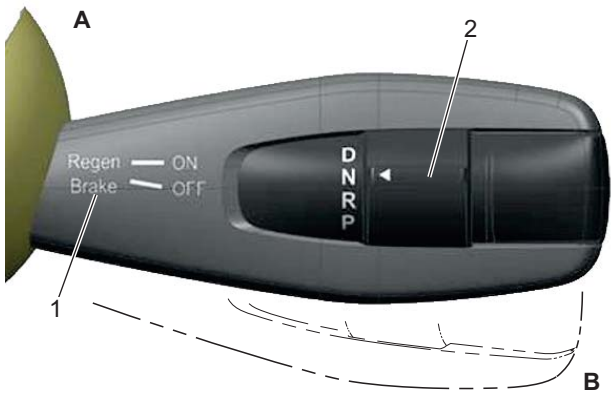

04/19/2021 f611930

A. Front View
B. Regenerative Brake Setting
1. Regenerative Brake
2. Drive/Neutral/Reverse/Park Switch

Fig. 17.7, Multifunction Gear Control

To select a gear, place your foot on the brake pedal and move the drive/neutral/reverse/park switch up or down. See **Fig. 17.7**, item 2.

To turn the regenerative braking feature ON, the stalk switch must be in the horizontal position; push the stalk switch down to turn the regenerative braking feature OFF. See **Fig. 17.7**, item 1.

Speedometer

The speedometer has two settings, either standard or metric. The standard setting, shown in **Fig. 17.8** registers speed in miles per hour (mph); the metric setting (not shown) registers speed in kilometers per hour (km/h).

The driver can select the standard or metric speedometer in the settings menu. See "OptiView Instrument Panel" for further instructions.



02/11/2021 f611894

Fig. 17.8, Speedometer, Standard Setting

OptiView™ Instrument Panel

The electric Walk-In Van OptiView instrument panel provides the driver with motor and vehicle information. It is comprised of electronic gauges, an audible alarm, a driver message center, and warning and indicator lamps (also known as telltales). Warning and indicator lamps illuminate in red (danger), amber (caution), green (status advisory), or blue (high-beam headlights active).

The OptiView instrument panel has tiles that can populate the left- and right-side of the display. Some vehicles are equipped with a 360-degree and backup camera video. For vehicles with this feature, the driver will see an alternate instrument panel layout.

See **Fig. 17.9** for a typical instrument panel and **Fig. 17.10** for the OptiView warning lamps. **Figure 17.11** shows how the instrument panel and warning lamps appear when the vehicle is in reverse gear.

Ignition Sequence

When the ignition is turned on, OptiView performs a self-test. Observing the ignition sequence is a good way to ensure the OptiView panel is functioning properly.

When the ignition is in the ON position, the following actions should occur:

- the antilock brake system, electronic stability control, and automatic traction control lamps illuminate for approximately three seconds, then are extinguished;
- seatbelt indicator lamp remains on for an additional five seconds after the other indicator lamps are extinguished;

- audible alarm sounds until the self-test is completed;
- if any faults are detected, an error message will display in the warning message area of the instrument panel.

When the self-test is complete, all warning lamps and indicators are extinguished.

Audible Alerts

An audible alert sounds during the ignition sequence until the self-test is completed, and whenever one of the following conditions exists:

- The parking brake is applied and the gearbox is not in neutral or park.
- The gearbox is in neutral, or the ignition is in the OFF position, and the parking brake is not set and the service brake is not depressed.
- Anytime the ignition is turned OFF and the panel lamps are still illuminated.

Emergency Shutdown

The instrument panel will shut down if the voltage supply is not within the normal operating range of 9 to 16 volts for more than 10 milliseconds. During emergency shutdown, the gauges freeze, the display goes blank, and the lamps turn off. When power is restored to within the normal operating range following an emergency shutdown, a self-test is performed before resuming normal operation.

Gear Shift Position

The highlighted letter shown in the instrument panel indicates the gear shift position; P for park, R for reverse, N for neutral, and D for drive. See **Fig. 17.9**, item 7. If none of the positions are highlighted, a failure mode has occurred and could be due to a communication problem with the gearbox.

Warning and Indicator Lamps

The instrument cluster has an emergency buzzer that sounds when serious conditions that require immediate attention occur.

A description of the standard warning and indicator lamps are listed below alphabetically.

ABS Warning

The ABS indicator illuminates when there is a malfunction in the vehicle antilock brake system (ABS).

NOTE: For more information about the ABS system, see **Chapter 9**.

⚠ WARNING

If the ABS warning light activates while driving, repair the system immediately to ensure full antilock brake capability. Operating the vehicle when the ABS needs to be serviced could cause an accident, possibly resulting in personal injury or death, or property damage.

Adaptive Cruise Control Failure Indicator

When a failure is detected, the adaptive cruise control failure indicator, with a vehicle and an exclamation (!) point illuminates.

Automatic Traction Control (ATC) Indicator

The ATC indicator illuminates during wheel spin and when the ATC system is active. When the system is active, it is set to deep snow/mud mode.

Battery Failure Lamp

The battery failure lamp illuminates when the battery pack and/or the charging/discharging management system has a failure and needs immediate attention. Vehicle motor derate will occur.

Battery Temperature Indicator

The battery temperature indicator illuminates when the battery temperature exceeds pre-set limits.

Battery Warning Lamp

The battery warning lamp notifies the driver that there is an issue with diagnostics.

Cruise Control/Adaptive Cruise Control Indicator

The cruise control indicator illuminates when the cruise control is activated.

The adaptive cruise control indicator (with a vehicle) illuminates when the adaptive cruise control is activated.

Electronic Stability Control (ESC) Indicator

The electronic stability control (ESC) indicator illuminates when the ESC system activates.

Fasten Seat Belt Warning

The fasten seat belts warning indicator illuminates for 30 seconds after the ignition switch is turned on.

Fog Lamp Indicator

The fog lamp indicator illuminates when the fog lamps are on.

Forward Collision System Indicator

The forward collision system indicator illuminates only when the collision mitigation system is not available.

Headlight/High-Beam Indicator

A green headlight indicator illuminates when the headlights are on.

The high-beam indicator (sideways beam icon) illuminates blue when the headlight high beams are on.

High Voltage Battery State of Charge Indicator

The high voltage battery state of charge indicator has two states as follows:

- Normal—The high voltage battery charge indicator is gray and the battery charge bar graph is blue.
- Low—The high voltage battery charge indicator is amber and the battery charge bar graph is amber. A 'Low Battery Charge' warning message appears in the top-left of the instrument panel.

High Voltage Interlock Loop Indicator

The high voltage interlock loop indicator illuminates when an open circuit (the electrical components can not communicate with each other) is detected on the high voltage interlock loop. Take the vehicle to an authorized Freightliner dealer for service.

Hill Start Aid Indicator

The hill start aid indicator notifies the driver that the hill start aid system is not functioning correctly or is offline.

Lane Departure Warning

The lane departure warning activates when the vehicle is driven out of the current lane.

Left-Turn Indicator

The left-turn indicator flashes on and off when the left-turn signal lights are flashing.

Both turn indicators flash when the hazard warning flasher is turned on.

Low Voltage Battery Warning

The low voltage battery warning indicator illuminates when the low voltage battery drops below 12 volts.

Low Windshield Washer Fluid Indicator

The low windshield washer fluid indicator illuminates when the washer fluid level is low.

Maintenance Warning Lamp

The maintenance warning lamp illuminates when the high-voltage battery pack, powertrain, or other controller on the vehicle requires maintenance. Take the vehicle to an authorized Freightliner dealer for service.

Marker Light Indicator

The marker light indicator activates when the marker lights are on.

Motion Enabled Indicator

The motion enabled indicator blinks when the vehicle is started. When the vehicle is ready to drive, the indicator stops blinking and remains solid.

Motor Warning/Motor Failure Indicator

The amber motor warning lamp notifies the driver that there is an issue with diagnostics. The vehicle will need service soon.

The red motor failure indicator notifies the driver when the motor and/or powertrain management system has failed and needs immediate attention. Vehicle motor derate will occur. Take the vehicle to an authorized Freightliner dealer immediately for service.

Parking Brake On Warning

The parking brake on indicator activates when the parking brake is engaged.

If the vehicle is moving at a speed of 2 mph (3 km/h) or more, the emergency buzzer will sound until the parking brake is released.

Performance Derate Indicator

The performance derate indicator notifies the driver of a powertrain motor derate. If the indicator activates, the driver should safely pull off to the side of the road and have the vehicle serviced as soon as possible.

Regenerative Braking System (RBS) Indicator

The RBS indicator illuminates green when the RBS is activated on the automatic multifunction gear control.

If the RBS is disabled, the indicator appears yellow on the instrument panel with a line across the letters.

Right-Turn Indicator

The right-turn indicator flashes on and off when the right-turn signal lights are flashing.

Both turn indicators flash when the hazard warning flasher is turned on.

Shift Inhibit Indicator

The shift inhibit indicator illuminates when the gearbox ECU is prohibiting shifting.

Tire Pressure Monitoring System Indicator

The tire pressure monitoring system indicator illuminates when the system detects an issue with one or more tires such as under or over pressure or over temperature. A warning message also appears in the driver display screen.

Instrument Panel Screens

The following information describes different screens for features that may appear on the OptiView instrument panel while driving the vehicle.

Motion Enabled Indicator Screen

When the vehicle is started and the high voltage system is engaged, the motion enabled indicator appears in the bottom left of the instrument panel and momentarily in the center of the speedometer, shown in **Fig. 17.12**, indicating that the vehicle is ready to drive.

Reverse Gear Display

NOTE: The reverse gear display is an optional feature.

When the vehicle is in reverse, the instrument panel provides a 360-degree image on the left-side, a proximity sensor in the top center, and rear video on the right-side. See **Fig. 17.13**.

High Voltage Battery Charge Screen

The percent of high voltage battery charge is displayed in the bottom left of the instrument cluster along with a corresponding bar graph. See **Fig. 17.14**. The battery charge bar graph has two states which include normal (blue) and low charge (amber). See **Fig. 17.15**.

When the high voltage battery charge is at 10% or below, a 'Low Battery Charge' warning message appears in the upper left corner of the instrument panel, shown in **Fig. 17.16**.

Turn Signal Screen

Turn signal indicators are located on the left- and right-side of the speedometer. When a turn signal is activated, a corresponding side-camera view is displayed in the center of the speedometer, if the vehicle is equipped with a 360-degree camera system. See **Fig. 17.17**.

Adaptive Cruise Control Screen

When the adaptive cruise control (ACC) is engaged, the ACC indicator and set speed appear above the current speed. A cruise control set-speed indicator appears at the corresponding position on the speedometer along with a graphical representation of a leading vehicle on the roadway, if it is within detection range of the ACC radar. See **Fig. 17.18**.

A white-band between the set-speed indicator and the current speed pointer on the speedometer indicates the difference between the current speed and the set speed of the vehicle. See **Fig. 17.18**, ref. A.

Headway (following distance) is shown by one to three amber rectangles, which represent far (three rectangles), medium (two rectangles), and near (one rectangle). See **Fig. 17.19**. The headway can be adjusted by pressing the 'up' or 'down' arrows on the steering wheel, shown in **Fig. 17.20**, to increase or decrease the following distance whenever the side tiles are not active and while ACC is engaged. See **Fig. 17.21**. When the accelerator is pressed, the headway rectangles (rectangles 1 through 3) become

outlines, as shown in **Fig. 17.22**. The arrows disappear, indicating that the system is no longer controlling the vehicle's headway, but that ACC is still on and will engage again once the accelerator pedal is no longer in use by the driver.

When there is no lead vehicle present, a blue target appears on the horizon of the instrument panel to inform the driver that the system is operational and scanning for vehicles. See **Fig. 17.23**. If a lead vehicle is detected, a representation of a vehicle is displayed on the roadway graphic along with the lead vehicle's current speed. See **Fig. 17.24**. As the lead vehicle gets closer or further away, the representation of the vehicle on the instrument panel gets closer or further from the amber headway threshold as well. When the lead vehicle reaches the headway threshold, the vehicle system will match the lead vehicle's speed. If the lead vehicle quickly slows and becomes closer than the headway threshold, the lead vehicle becomes outlined in amber until the condition is no longer present. See **Fig. 17.25**.

Collision Mitigation System

When the collision mitigation system (CMS) detects a possible imminent forward collision, an audible alert sounds. A red outlined vehicle and the distance to the vehicle appear under the speedometer, as shown in **Fig. 17.26**, ref. A. If the CMS becomes unavailable, an amber indicator illuminates in the center of the screen. See **Fig. 17.26**, ref. B.

Left- and Right-Side Tiles

The driver can access the left- and right-side tiles by pressing the 'home' button on the steering wheel. See **Fig. 17.20**. The first press activates the left side tile and each additional press changes the active side from left to right. See **Fig. 17.27**.

Identical tiles are located on the left and right sides of the instrument panel, allowing for customization by the driver. See **Fig. 17.28**. The right side has an additional 'Settings' tile to access the settings menu. The available tiles are:

- Blank (if the driver does not want a tile to appear)
- Regenerative Braking
- Battery Temperature
- Battery Charge
- Tire Pressure Monitoring System (optional)
- Trip 1
- Trip 2
- Settings (right-side tile only)

Pressing the 'up' or 'down' arrows on the steering wheel navigates through the tiles on the active side. Pressing OK on the steering wheel to confirm the tile selection, or five seconds of inactivity, deactivates the active tile and the currently displayed tiles will be shown in the instrument panel. The active tile is indicated with a square container around the tile and may contain messaging if the tile has resettable information or is the 'Settings' tile. See **Fig. 17.29**.

The Trip 1 and Trip 2 tiles contain information that can be reset by holding the OK button on the steering wheel for three seconds when the tile is active. This action is displayed to the user with a circular confirmation ring that fills clockwise around the OK button graphic at the bottom of the active tile as shown in **Fig. 17.30**.

Settings Tile

The settings tile allows the driver to access the settings menu by holding the OK button on the steering wheel for three seconds when the tile is active. This action is displayed to the user with a circular confirmation ring that fills clockwise around the OK button graphic at the bottom of the active tile. See **Fig. 17.30** for an example. After confirmation, the settings menu appears in the bottom center of the screen, as shown in **Fig. 17.31**. The driver uses the 'up' and 'down' arrows on the steering wheel to select the standard or metric speedometer, or diagnostics.

NOTE: The diagnostics menu is only used by technicians to setup, troubleshoot, or diagnose systems on the vehicle. It contains information such as fault codes, statuses of inputs and outputs to the instrument panel, and 360-degree camera calibration.

The driver can select 'Exit Menu' or hold the 'home' button on the steering wheel for three seconds to close the settings menu and return to the active settings tile on the right side of the instrument panel.

Warning Messages

When a system fault is detected, a warning message appears in the upper left corner of the screen. See **Fig. 17.32**. There are two types of warnings, an amber warning, and a red warning for critical conditions. Depending on the type of warning, the driver may be able to press the OK button on the steering

wheel to dismiss it. If the warning is critical, the driver may not be able to dismiss it.

Warning Message with the Vehicle in Reverse

When the vehicle is in reverse gear and is equipped with a 360-degree camera system, any active warning messages appear in the center of the instrument panel. For an example, see **Fig. 17.33**.

Tire Pressure Warning

When low or high tire pressure or temperature is detected, the left side tile transitions to tire pressure and a warning message appears in the upper-left corner. See **Fig. 17.34**. When the OK button on the steering wheel is pressed, the warning message disappears and the left tile transitions back to the previously selected tile. The tire pressure monitoring system indicator remains active until the condition is no longer present.

High Voltage Battery Charging (key off)

When the ignition is in the OFF position and the vehicle is connected to a battery charging dispenser (see the heading, Charging the High-Voltage Batteries) or the headlamps are turned on, the charging screen will illuminate for two minutes. See **Fig. 17.35**. This screen displays the high voltage battery temperature and odometer at the bottom of the screen. The center area provides a battery charging icon along with the current percent of battery charge.

High Voltage Battery Charging (key on)

When the ignition is in the ON position and the vehicle is connected to a battery charging dispenser (see the heading, Charging the High-Voltage Batteries), the charging screen transitions to display the left- and right-side tiles along with the gear, and low voltage battery information. In the top left of the display, a warning message appears, and the vehicle is locked in the park position until the charger is removed. If the driver tries to put the vehicle in gear with the charger still attached, the amber warning message and the center battery charging icon will flash. See **Fig. 17.36**.

Towing

NOTICE

When towing or pushing the vehicle, regardless of the distance or speed traveled, remove the axle shafts. Failure to do this when towing the vehicle with the rear wheels on the ground could result in damage to the gearbox and other components.

For towing instructions, see **Chapter 15**.

Jumpstarting

IMPORTANT: The electrical systems must be operating to allow the high-voltage battery pack to be charged. Jump starting does not charge the high-voltage battery pack. The high-voltage battery pack must be charged with a battery charging dispenser before the vehicle can be driven.

Jumpstarting the electric vehicle low-voltage batteries is identical to diesel vehicles, which use the vehicle 12-volt battery system. See **Chapter 14** for jumpstarting instructions.

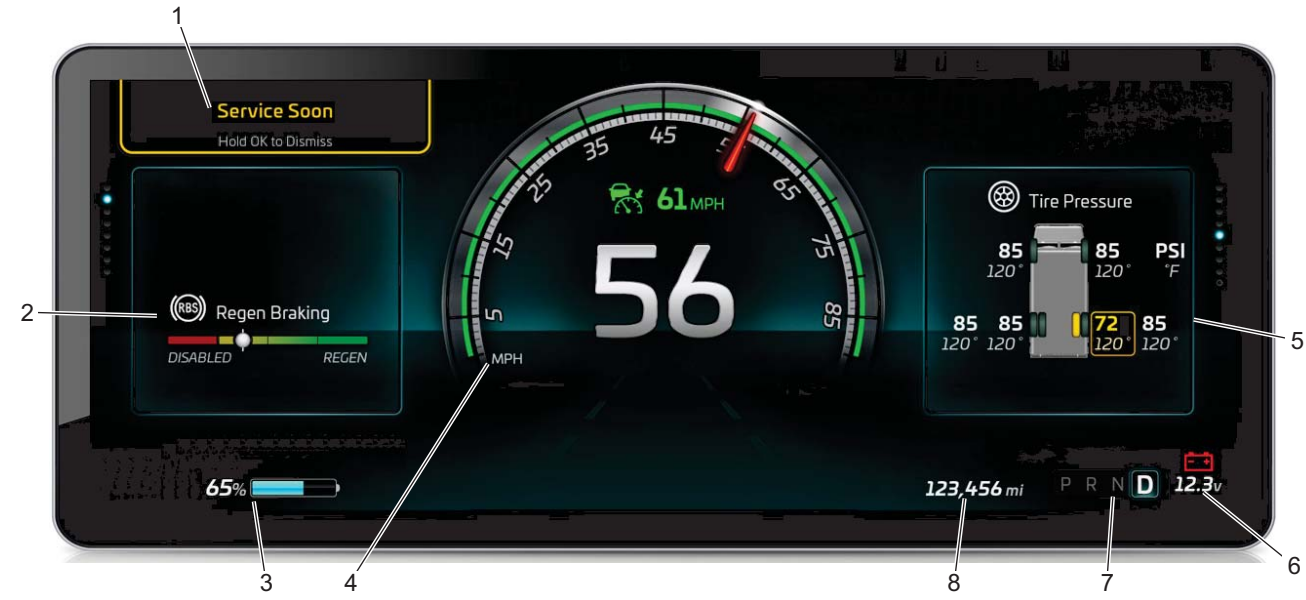

04/15/2021 f611916

1. Warning Message
2. Left Tile
3. High Voltage Battery Charge
4. Speedometer
5. Right Tile
6. Low Battery Voltage Warning
7. Gear Shift Position Indicator
8. Odometer

Fig. 17.9, Typical Instrument Panel, Electric Vehicle

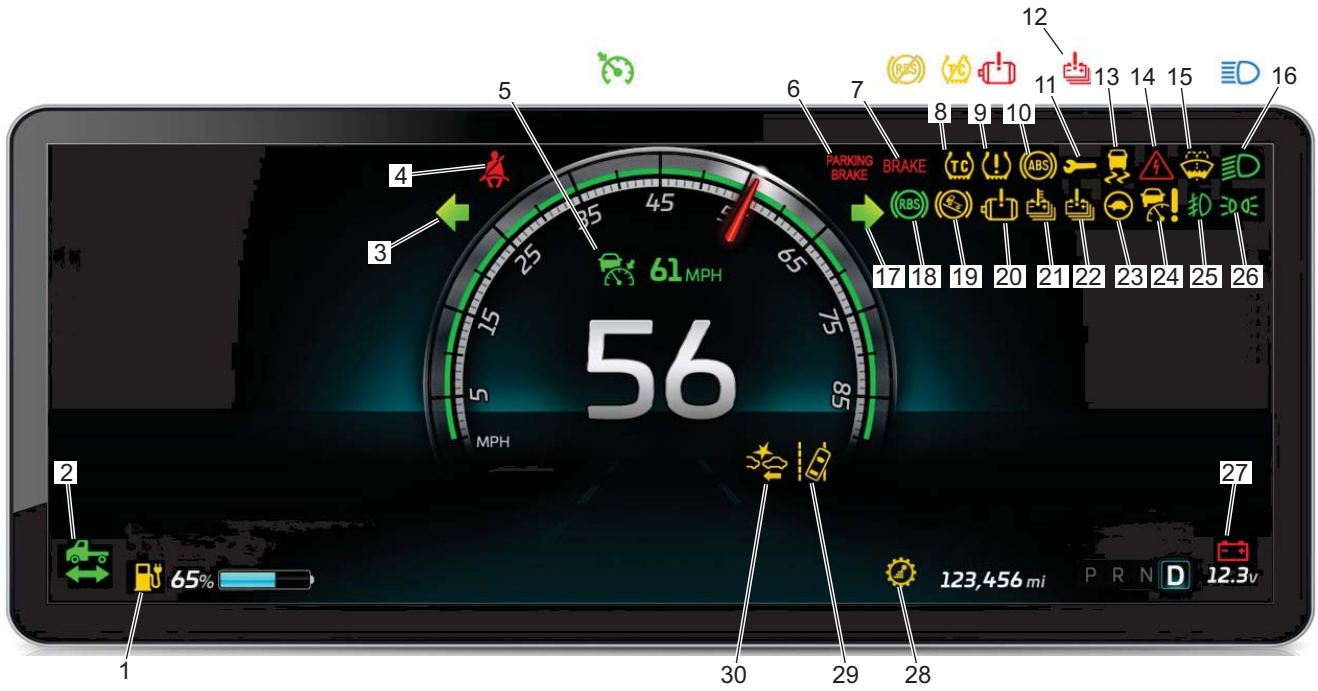

04/14/2021 f611926

1. High Voltage Battery Charge Indicator
2. Motion Enabled Indicator
3. Left-Turn Indicator
4. Fasten Seat Belt Warning
5. Cruise Control/Adaptive Cruise Control Indicator
6. Parking Brake On Warning
7. Low Air Brake Pressure Warning
8. Automatic Traction Control Indicator
9. Tire Pressure Monitoring System Indicator
10. ABS Warning
11. Maintenance Indicator
12. Battery Failure Lamp
13. Electronic Stability Control (ESC) Indicator
14. High Voltage Interlock Loop Indicator
15. Low Windshield Washer Fluid Indicator
16. Headlight/High-Beam Indicator
17. Right-Turn Indicator
18. Regenerative Braking System Indicator
19. Hill Start Aid Indicator
20. Motor Warning/Motor Failure Indicator
21. Battery Temperature Indicator
22. Battery Warning Lamp
23. Performance Derate Indicator
24. Adaptive Cruise Control Failure Indicator
25. Fog Lamp Indicator
26. Marker Light Indicator
27. Low Voltage Battery Warning
28. Shift Inhibit Indicator
29. Lane Departure Warning (not used)
30. Forward Collision System Indicator

Fig. 17.10, Warning Lamps, Electric Vehicle



Fig. 17.11, Instrument Panel and Warning Lamps, Electric Vehicle in Reverse Gear with a 360-Degree Camera System

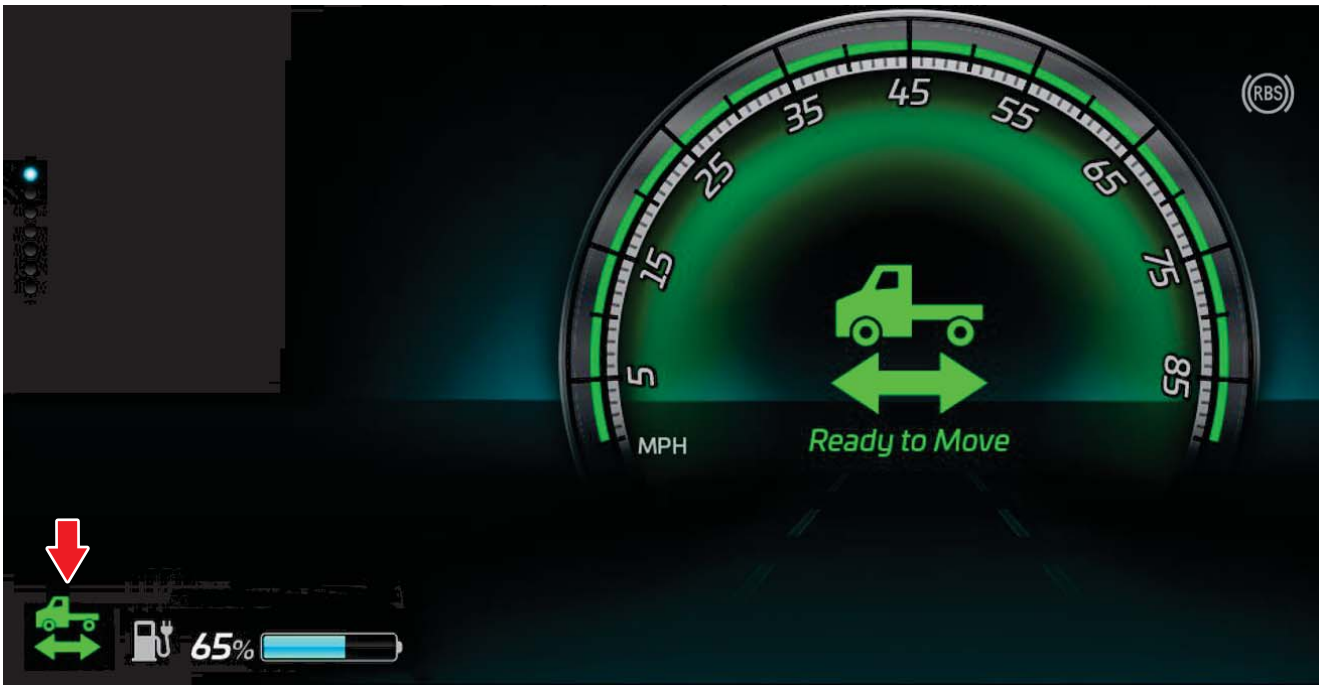

02/11/2021 f611896

Fig. 17.12, Motion Enabled Indicator, Activated

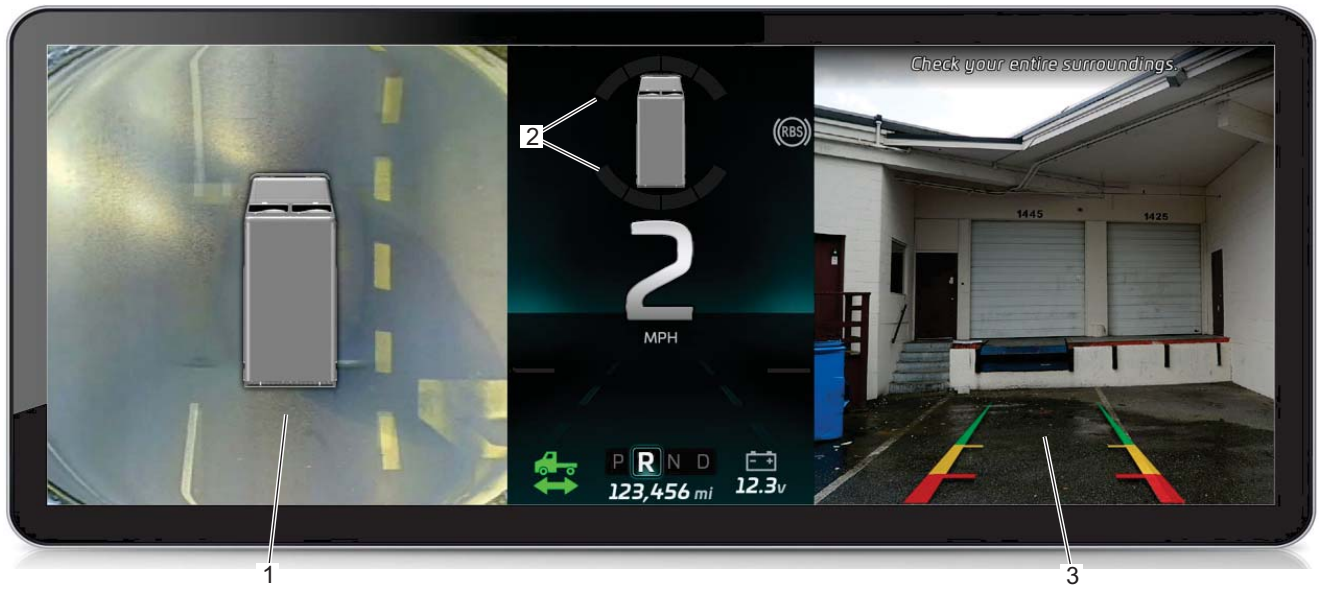

02/11/2021 f611917

1. 360-Degree Image
2. Proximity Sensor
3. Rear Video

Fig. 17.13, Reverse Gear Display Screen (warning lamps not shown for clarity)

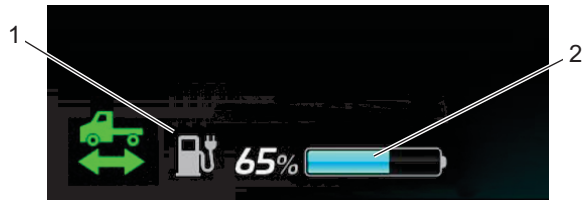

02/11/2021 f611897

1. High Voltage Battery State of Charge Indicator
2. Battery Charge Bar Graph

Fig. 17.14, High Voltage Battery State of Charge Indicator and Bar Graph

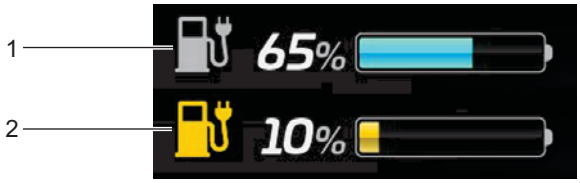

04/15/2021 f611898

1. Normal Charge (blue bar)
2. Low Charge (amber bar)

Fig. 17.15, Battery Charge Bar Graph

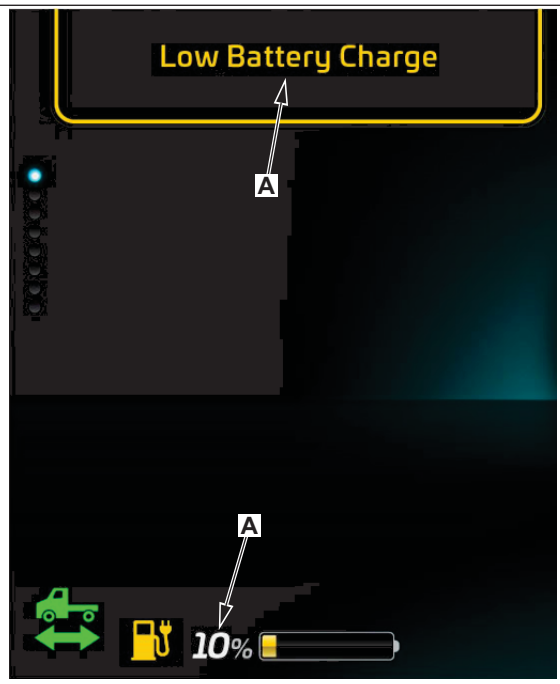

02/11/2021 f611899

A. When the high voltage battery charge is at 10% or below, a 'Low Battery Charge' warning message appears in the upper left corner of the instrument panel.

Fig. 17.16, Low Battery Charge Warning



02/12/2021 f611908

A. When a turn signal is activated and the vehicle is equipped with a 360-degree camera system, a side-camera view is displayed in the center of the speedometer.
1. Turn Signal Indicator

Fig. 17.17, Turn Signal Screen



02/11/2021 f611901

A. A white-band between the set-speed indicator and the current speed pointer on the speedometer indicates the difference between the current speed and the set speed of the vehicle.
1. Adaptive Cruise Control Indicator
2. Speedometer Pointer
3. Set-Speed Indicator
4. Adaptive Cruise Control Set Speed
5. Leading Vehicle

Fig. 17.18, Adaptive Cruise Control Screen

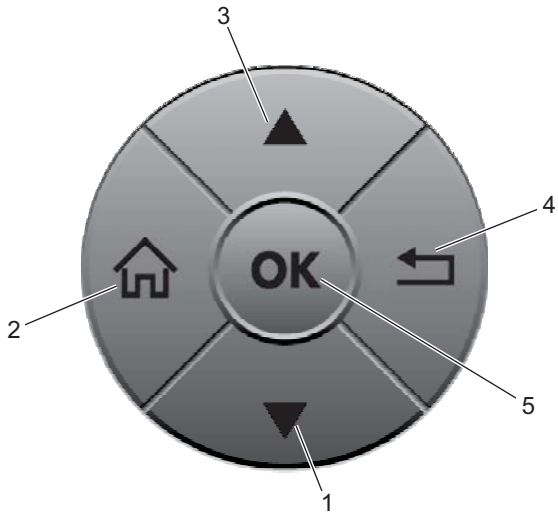

02/11/2021 f611923

1. Down Arrow
2. Home Button
3. Up Arrow
4. Back Button
5. OK Button

Fig. 17.20, Steering Wheel Buttons



A **B** **C**

02/11/2021 f611902

A. Far Headway B. Medium Headway C. Near Headway

Fig. 17.19, Headway Following Distance



04/15/2021 f611925

The up and down arrows shown in the instrument panel indicate that the driver can increase or decrease the ACC headway (following distance), using the arrows on the steering wheel.

Fig. 17.21, Adaptive Cruise Control Headway Navigation Screen



02/11/2021 f611903

A. When the accelerator is pressed, the headway rectangles (rectangles 1 through 3) become outlines. ACC is still on and will engage again once the accelerator pedal is no longer in use by the driver.

Fig. 17.22, Accelerator is Engaged, no Headway Protection

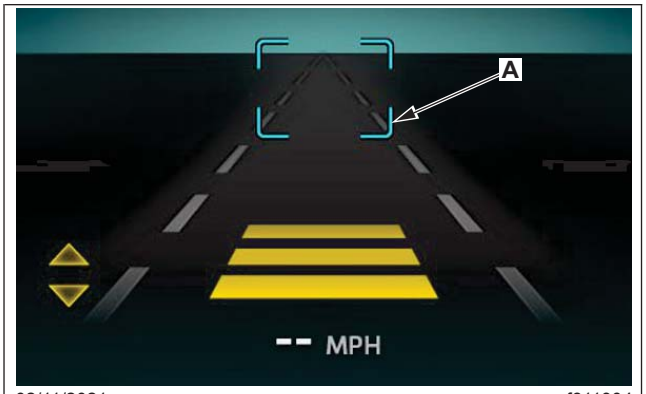

02/11/2021 f611904

A. When there is no lead vehicle present, a blue target appears on the horizon of the instrument panel to inform the driver that the system is operational and scanning for vehicles.

Fig. 17.23, Lead Vehicle is not Present

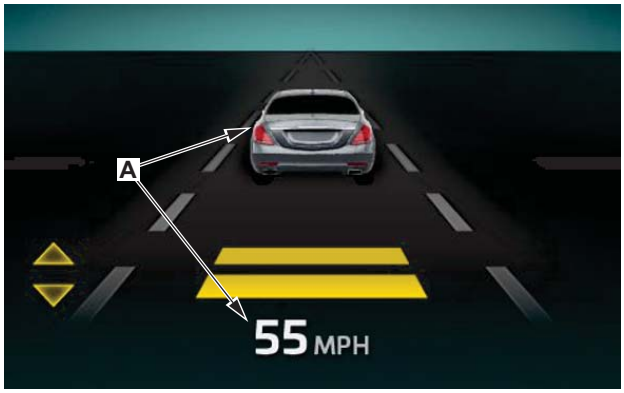

02/11/2021 f611905

A. When a lead vehicle is detected, a representation of a vehicle is displayed on the roadway graphic along with the lead vehicle's current speed.

Fig. 17.24, Lead Vehicle is Detected



02/11/2021 f611906

A. The lead vehicle is closer than the allowed headway threshold and is outlined in amber. The amber outlined vehicle will return to normal once the headway threshold distance is farther away.

Fig. 17.25, Lead Vehicle Headway Alert



02/11/2021 f611907

A. When CMS detects a possible forward collision, the forward vehicle is outlined in red and the distance to the vehicle is shown to the right.
B. The forward collision system indicator illuminates when the system is not available.

Fig. 17.26, Collision Mitigation System Screen



04/15/2021 f611922

A. The left-side tiles are active and noted by the blue square. The first tile is blank on both sides.

Fig. 17.27, Left-Side Tiles are Active



04/15/2021 f611924

A. Tachometer tile is selected for the left side.
B. Oil pressure and Coolant Temperature monitoring is selected for the right side.

Fig. 17.28, Tiles Selected for the Left and Right Side.



04/15/2021 f611910

A. The left-side tile is active and indicated by a square container around the tile.

Fig. 17.29, Active Tile, Left Side



02/11/2021 f611911

A. Hold the 'OK' button for three seconds to reset the Trip 1 an Trip 2 tiles. As the reset takes place, a circle fills clockwise around the 'OK' button below the active tile.

Fig. 17.30, Confirmation to Reset Active Tile Data



02/11/2021 f611912

1. Settings Tile
2. Settings Menu

Fig. 17.31, Settings Menu Screen



02/11/2021 f611914

A. Warning messages appear in the upper-left portion of the instrument panel.
B. A red critical warning message is shown in this location as an example only and would normally appear in the upper-left portion of the instrument panel.

Fig. 17.32, Warning Message Screen



02/11/2021 f611915

A. When the vehicle is in reverse gear, active warning messages appear in the top-center of the instrument panel.

Fig. 17.33, Warning Message, Vehicle in Reverse Gear with a 360-Degree Camera System

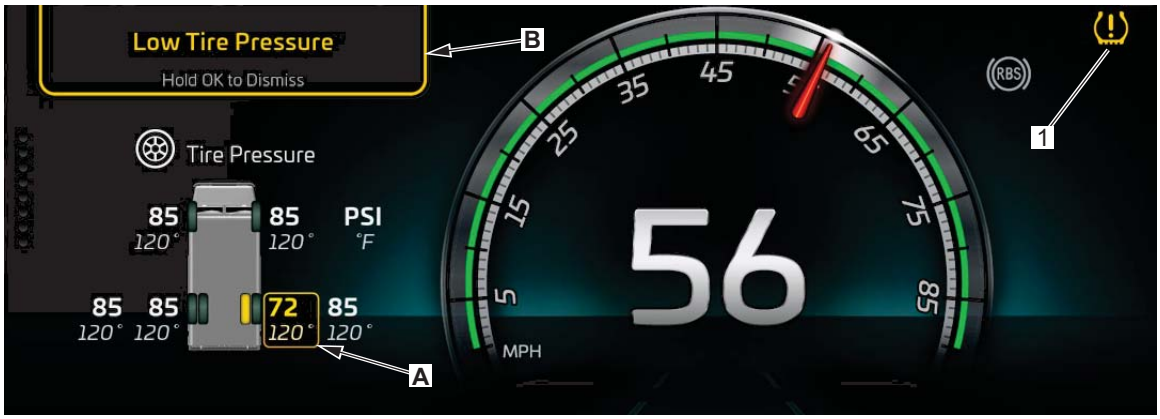

02/11/2021 f611913

A. The tire pressure tile appears on the left side of the instrument panel to notify the driver when an issue occurs with one or more tires. In this example, the tire in amber has low pressure.
B. A warning message appears in the upper-left portion of the instrument panel.
1. Tire Pressure Monitoring System Indicator

Fig. 17.34, Tire Pressure Screen

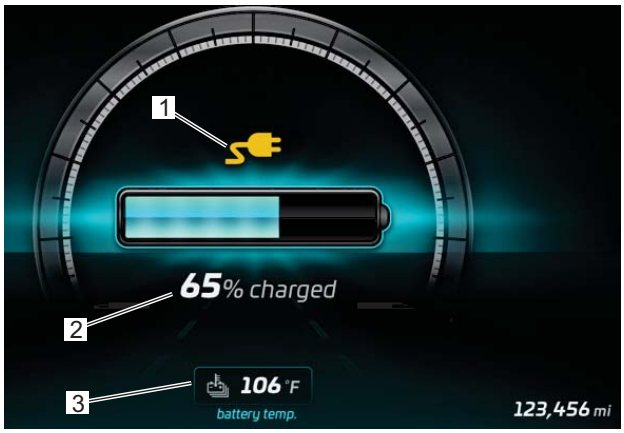

02/11/2021 f611919

1. Battery Charging Icon
2. Percent of Battery Charge
3. High Voltage Battery Temperature

Fig. 17.35, High Voltage Battery Charging Screen (key off)

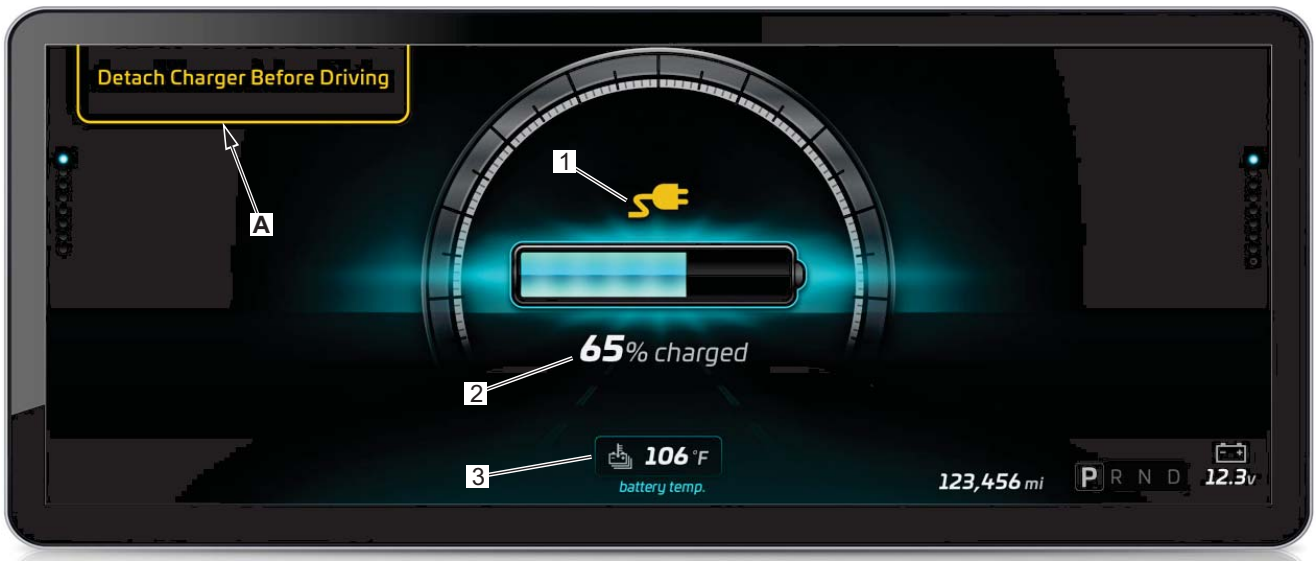

02/11/2021 f611920

A. When the ignition is in the ON position, a warning message appears in the upper left corner to notify the driver to remove the charger before driving.

1. Battery Charging Icon
2. Percent of Battery Charge
3. High Voltage Battery Temperature

Fig. 17.36, High Voltage Battery Charging Screen (key on)

18

Specifications

Torque Charts 18.1
Conversion Charts 18.4
Fluid and Lubricant Specifications 18.5
Fuse/Relay/Circuit Breaker Identification 18.5

Torque Charts

Torque Values for U.S. Customary Thread Fasteners With Lubricated* or Plated Threads†								
Thread Diameter—Pitch	Regular Hex				Flanged			
	Grade 5 Bolt	Grade 5 or B Nut	Grade 8 or 8.2 Bolt	Grade 8 or C Nut	Grade 5 Bolt	Grade B Nut	Grade 8 or 8.2 Bolt	Grade G Nut
	Torque: lbf·ft (N·m)		Torque: lbf·ft (N·m)		Torque: lbf·ft (N·m)		Torque: lbf·ft (N·m)	
	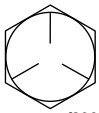 f230002	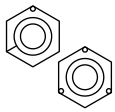 f230003	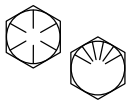 f230004	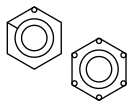 f230005	 f230006	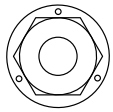 f230007	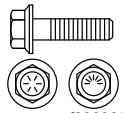 f230008	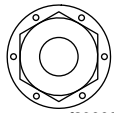 f230009
1/4–20	7 (9)		8 (11)		6 (8)		10 (14)	
1/4–28	8 (11)		9 (12)		7 (9)		12 (16)	
5/16–18	15 (20)		16 (22)		13 (18)		21 (28)	
5/16–24	16 (22)		17 (23)		14 (19)		23 (31)	
3/8–16	26 (35)		28 (38)		23 (31)		37 (50)	
3/8–24	30 (41)		32 (43)		25 (34)		42 (57)	
7/16–14	42 (57)		45 (61)		35 (47)		60 (81)	
7/16–20	47 (64)		50 (68)		40 (54)		66 (89)	
1/2–13	64 (87)		68 (92)		55 (75)		91 (123)	
1/2–20	72 (98)		77 (104)		65 (88)		102 (138)	
9/16–12	92 (125)		98 (133)		80 (108)		130 (176)	
9/16–18	103 (140)		110 (149)		90 (122)		146 (198)	
5/8–11	128 (173)		136 (184)		110 (149)		180 (244)	
5/8–18	145 (197)		154 (209)		130 (176)		204 (277)	
3/4–10	226 (306)		241 (327)		200 (271)		320 (434)	
3/4–16	253 (343)		269 (365)		220 (298)		357 (484)	
7/8–9	365 (495)		388 (526)		320 (434)		515 (698)	
7/8–14	402 (545)		427 (579)		350 (475)		568 (770)	
1–8	—		582 (789)		—		—	
1–12	—		637 (863)		—		—	
1–14	—		652 (884)		—		—	

* FCCC recommends that all plated and unplated fasteners be coated with oil before installation.

† Use these torque values if either the bolt or nut is lubricated or plated (zinc-phosphate conversion-coated, cadmium-plated, or waxed, Geomet 321XL coated, or waxed).

Table 18.1, Torque Values for U.S. Customary Thread Fasteners With Lubricated or Plated Threads

Torque Values for U.S. Customary Thread Fasteners With Dry (Unlubricated)* Plain (Unplated) Threads†						
Thread Diameter—Pitch	Regular Hex				Flanged	
	Grade 5 Bolt	Grade 5 or B Nut	Grade 8 or 8.2 Bolt	Grade 8 or C Nut	Grade 8 or 8.2 Bolt	Grade G Nut
	Torque: lbf·ft (N·m)		Torque: lbf·ft (N·m)		Torque: lbf·ft (N·m)	
	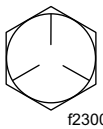 f230002	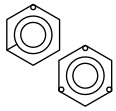 f230003	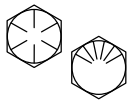 f230004	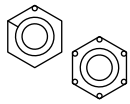 f230005	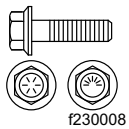 f230008	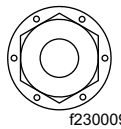 f230009
1/4–20	8 (11)		10 (14)		—	
1/4–28	9 (12)		12 (16)		—	
5/16–18	15 (20)		22 (30)		22 (30)	
5/16–24	17 (23)		25 (34)		—	
3/8–16	28 (38)		40 (54)		40 (54)	
3/8–24	31 (42)		45 (61)		—	
7/16–14	45 (61)		65 (88)		65 (88)	
7/16–20	50 (68)		70 (95)		—	
1/2–13	70 (95)		95 (129)		95 (129)	
1/2–20	75 (102)		110 (149)		—	
9/16–12	100 (136)		140 (190)		140 (190)	
9/16–18	110 (149)		155 (210)		—	
5/8–11	135 (183)		190 (258)		190 (258)	
5/8–18	155 (210)		215 (292)		—	
3/4–10	240 (325)		340 (461)		340 (461)	
3/4–16	270 (366)		380 (515)		—	
7/8–9	385 (522)		540 (732)		—	
7/8–14	425 (576)		600 (813)		—	
1–8	580 (786)		820 (1112)		—	
1–12	635 (861)		900 (1220)		—	
1–14	650 (881)		915 (1241)		—	

* Threads may have residual oil, but will be dry to the touch.

† Male and female threads (bolt and nut) must both be unlubricated and unplated. If either is plated or lubricated, use **Table 18.1**. FCCC recommends that all plated and unplated fasteners be coated with oil before installation.

Table 18.2, Torque Values for U.S. Customary Thread Fasteners With Dry (Unlubricated) Plain (Unplated) Threads

Specifications

Torque Values for Metric Thread Fasteners With Lubricated* or Plated Threads†				
Thread Diameter—Pitch	Class 8.8 Bolt	Class 8 Nut	Class 10.9 Bolt	Class 10 Nut
	Torque: lbf·ft (N·m)		Torque: lbf·ft (N·m)	
	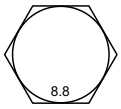 f230010	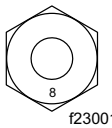 f230011	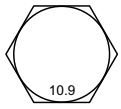 f230012	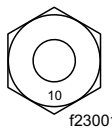 f230013
M6	5 (7)		7 (9)	
M8	12 (16)		17 (23)	
M8 x 1	13 (18)		18 (24)	
M10	24 (33)		34 (46)	
M10 x 1.25	27 (37)		38 (52)	
M12	42 (57)		60 (81)	
M12 x 1.5	43 (58)		62 (84)	
M14	66 (89)		95 (129)	
M14 x 1.5	72 (98)		103 (140)	
M16	103 (140)		148 (201)	
M16 x 1.5	110 (149)		157 (213)	
M18	147 (199)		203 (275)	
M18 x 1.5	165 (224)		229 (310)	
M20	208 (282)		288 (390)	
M20 x 1.5	213 (313)		320 (434)	
M22	283 (384)		392 (531)	
M22 x 1.5	315 (427)		431 (584)	
M24	360 (488)		498 (675)	
M24 x 2	392 (531)		542 (735)	
M27	527 (715)		729 (988)	
M27 x 2	569 (771)		788 (1068)	
M30	715 (969)		990 (1342)	
M30 x 2	792 (1074)		1096 (1486)	

* FCCC recommends that all plated and unplated fasteners be coated with oil before installation.

† Use these torque values if either the bolt or nut is lubricated or plated (zinc-phosphate conversion-coated, cadmium-plated, or waxed, Geomet 321XL coated, or waxed).

Table 18.3, Torque Values for Metric Thread Fasteners With Lubricated or Plated Threads

Conversion Charts

When You Know U.S. Customary	Multiply By	To Get Metric	When You Know Metric	Multiply By	To Get U.S. Customary
Length					
inches (in)	25.4	millimeters (mm)		0.03937	inches (in)
inches (in)	2.54	centimeters (cm)		0.3937	inches (in)
feet (ft)	0.3048	meters (m)		3.281	feet (ft)
yards (yd)	0.9144	meters (m)		1.094	yards (yd)
miles (mi)	1.609	kilometers (km)		0.6215	miles (mi)
Area					
square inches (in^2)	645.16	square millimeters (mm^2)		0.00155	square inches (in^2)
square inches (in^2)	6.452	square centimeters (cm^2)		0.155	square inches (in^2)
square feet (ft^2)	0.0929	square meters (m^2)		10.764	square feet (ft^2)
Volume					
cubic inches (in^3)	16387.0	cubic millimeter (mm^3)		0.000061	cubic inches (in^3)
cubic inches (in^3)	16.387	cubic centimeters (cm^3)		0.06102	cubic inches (in^3)
cubic inches (in^3)	0.01639	liters (L)		61.024	cubic inches (in^3)
fluid ounces (fl oz)	29.54	milliliters (mL)		0.03381	fluid ounces (fl oz)
pints (pt)	0.47318	liters (L)		2.1134	pints (pt)
quarts (qt)	0.94635	liters (L)		1.0567	quarts (qt)
gallons (gal)	3.7854	liters (L)		0.2642	gallons (gal)
cubic feet (ft^3)	28.317	liters (L)		0.03531	cubic feet (ft^3)
cubic feet (ft^3)	0.02832	cubic meters (m^3)		35.315	cubic feet (ft^3)
Weight/Force					
ounces (av) (oz)	28.35	grams (g)		0.03527	ounces (av) (oz)
pounds (av) (lb)	0.454	kilograms (kg)		2.205	pounds (av) (lb)
U.S. tons (t)	907.18	kilograms (kg)		0.001102	U.S. tons (t)
U.S. tons (t)	0.90718	metric tons (t)		1.1023	U.S. tons (t)
Torque/Work Force					
inch–pounds (lbf·in)	11.298	Newton–centimeters (N·cm)		0.08851	inch–pounds (lbf·in)
foot–pounds (lbf·ft)	1.3558	Newton–meters (N·m)		0.7376	foot–pounds (lbf·ft)
Pressure/Vacuum					
inches of mercury (inHg)	3.37685	kilo Pascals (kPa)		0.29613	inches of mercury (inHg)
pounds per square inch (psi)	6.895	kilo Pascals (kPa)		0.14503	pounds per square inch (psi)

Table 18.4, Metric/U.S. Customary Conversion

When You Know	Subtract	Then Divide By	To Get	When You Know	Multiply By	Then Add	To Get
degrees Fahrenheit (°F)	32	1.8	degrees Celsius (°C)		1.8	32	degrees Fahrenheit (°F)

Table 18.5, Temperature Conversion

Fluid and Lubricant Specifications

See **Table 18.6** for fluid and lubricant specifications.

Fluid and Lubricant Specifications	
Component	**Recommended Fluid or Lubricant**
Front Axle Spindle Pins, Tie Rods, Drag Link, Intermediate Steering Shaft, Front Brake and Pedal Shafts, Slip Spline and Universal Joints	Multipurpose Grease Lithium 12 Hydroxy Stearate NLGI No. 2; for temperatures below 0°F (–18°C), use MIL-G-10924B
Hydraulic Brake Master Cylinder	Heavy-Duty DOT 3 Brake Fluid
Brake and Pedal Pivots	Starplex 2 (lithium soap-based grease)
Engine	See Manufacturer's Recommendations
Transmission	See Manufacturer's Recommendations
Fuel	Ultralow-Sulfur Diesel Fuel CMS 20067 (CNG Engines) HD5 Grade Propane
Disc Brake Caliper Rails	FCCC No. 4JD623 Brake Caliper Slide Grease
Front Axle Wheel Bearings	Lithium Grease Organic SAE 80/90 Lubricant Mobil Synthetic SHC007 Lubricant Synthetic 75W-90 Lubricant
Rear Axle Differential	See Manufacturer's Recommendations
Hydraulic System Reservoir	Dexron® III ATF or equivalent
Engine Coolant	Refer to the engine manufacturer's service literature for approved coolant.

Table 18.6, Fluid and Lubricant Specifications

Fuse/Relay/Circuit Breaker Identification

NOTE: The fuse/circuit breaker panel is located under the instrument panel to the left of the steering column. Circuit breakers protect against circuit overload. If a circuit becomes overloaded (usually caused by a short to ground), the circuit breaker opens, stopping current flow. Auto-reset breakers are installed. Depending on vehicle options, fuse/circuit breaker locations may vary from those shown. A power distribution panel may also be installed on the vehicle. This panel houses plug-in fuses and relays. See **Fig. 18.1** and **Fig. 18.2**.

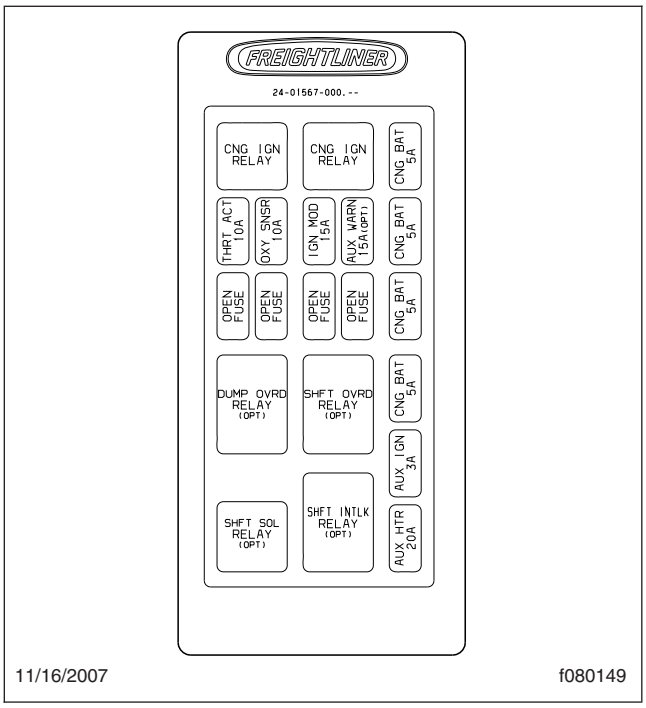

Fig. 18.1, Fuse/Relay/Circuit Breaker Panels (left-side shown, typical)

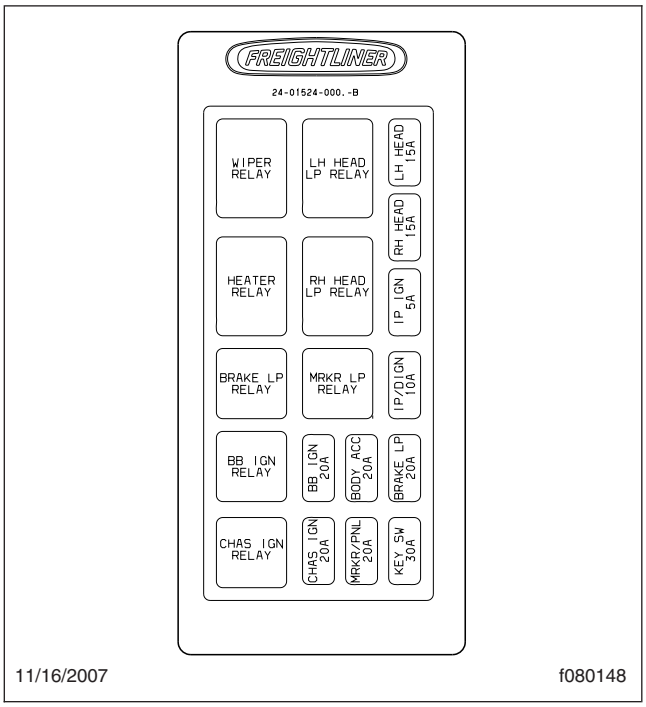

Fig. 18.2, Fuse/Relay/Circuit Breaker Panels (right-side shown, typical)

Index

Subject Page

A

Air Brake System 9.2
Air Brake System With External Fill (Shrader) Valve 9.2
Automatic Slack Adjusters 9.3
General Information 9.2
Operation 9.2
Allison Automatic Transmissions 7.1
Automatic Mode (A) 7.6
Automatic Transmission Multifunction Stalk Switch 7.3
Direction Switch 7.4
Engine Brake 7.5
Gear Display 7.5
Gear Switch 7.4
Manual Mode (M) 7.6
Mode Switch 7.4
Operating Instructions, On-Highway Transmissions 7.2
Operation Tips 7.5
Power Up and Shift into Gear 7.5
Range Inhibit Indicator, 2000 Series Transmissions 7.1
Safety Precautions 7.1
Ametek Instrument Panel 2.1
Menu Navigation 2.3
Menu System 2.1
Message Display Center 2.1
Priority Messages 2.1
Self-Test 2.1

B

Brake Burnishing (new vehicle) 9.3
Braking Control 5.7
Parking Brake Control 5.7

C

Care of Chrome Parts 13.1
Changing a Flat Tire 14.4
Charging the High-Voltage Batteries 17.3
CNG Fuel Tank Filling Procedure 10.1
CNG General Information 10.1
CNG Safety Precautions 10.3
CNG General Safety Information 10.3
CNG Workshop Precautions 10.3

Subject Page

Major Repair and Replacement of CNG Parts 10.4
Servicing the CNG System 10.4
Component Information Label 1.1
Controls 17.5
Multifunction Gear Control 17.5
Conversion Charts 18.4
Cruise Control 5.4

D

Daily Pretrip Inspection and Maintenance Checklist 11.2
Daily Pretrip Inspection and Maintenance Procedures 12.1
Dashboard and Instrument Panel Care 13.1
Dash-Mounted Controls 5.8
Aftertreatment System (ATS) Regen Switch 5.8
Low Idle Adjustment Switch 5.9
Driving Precautions 7.1

E

Electric Vehicle System Overview 17.1
Regenerative Braking 17.3
Safety Information 17.1
Electrical System Controls 5.1
Battery Disconnect Switch (optional) 5.1
Emergency Starting With Jumper Cables 14.2
Emissions Labels 1.1
Aftertreatment System Indicators Label 1.1
Certified Clean Idle Label 1.4
Vehicle Emission Control Information Label 1.2
Engine Brake 9.3
Engine Brake Operation 9.4
Engine Break-In 16.3
Engine Coolant 16.3
Engine Oil 16.4
Changing the Engine Oil 16.5
Checking the Engine Oil 16.5
Engine Oil Additives 16.5
Engine Oil Flushing 16.5
Engine Operation 6.2
Cold-Weather Operation 6.2
Normal Operation 6.2
Engine Shutdown 6.9

Subject	Page
Engine Starting	10.2
Cold-Weather Starting	6.2
General Information	6.1
Normal Starting	6.1
Exhaust Aftertreatment System (ATS)	6.3
DEF Gauge	6.7
DEF Tank	6.7
DEF Warnings and Engine Limits	6.7
Diesel Exhaust Fluid and Tank, EPA10 and Newer Engines	6.6
EPA07 Engines	6.4
EPA10 and Newer Engines	6.4
F	
Fast Idle System	16.3
Fast Idle Operation	16.3
Fluid and Lubricant Specifications	18.5
Front Towing Hookup	15.1
Fuel	16.4
Additives	16.4
Gasoline Octane	16.4
Gasoline Specifications	16.4
Fuse/Relay/Circuit Breaker Identification	18.5
G	
Gauges	4.4
Air Intake Restriction Gauge	4.6
Coolant Temperature Gauge	4.4
Diesel Exhaust Fluid (DEF) Level Gauge	4.5
Fuel Indicator and Bar Graph	4.5
Oil Pressure Gauge	4.5
Primary and Secondary Air Pressure Gauges	4.6
H	
Hazard Warning Lights	14.1
High Idle Options	6.3
High Idle with Cruise Control	6.3
Voltage-Based Auto High Idle	6.3
Horn Controls	5.5
Hydraulic Brake System	9.1
General Information	9.1
Meritor WABCO® Antilock Braking System (ABS)	9.1
Operation	9.1
I	
Ignition Switch and Key	5.1
J	
Jumpstarting	17.11
L	
Lighting Controls	5.1
Automatic Ambient Headlight Sensor	5.1
Fog Lights	5.2
Hazard Warning Lights	5.3
Headlights	5.1
High-Beam Headlights	5.2
Marker Interrupt	5.2
Marker Lights	5.2
Turn Signals	5.2
M	
Monthly Post-Trip Inspection and Maintenance Checklist	11.3
Monthly Post-Trip Inspection and Maintenance Procedures	12.10
Motor Starting and Shutdown	17.4
Shutdown	17.5
Starting	17.4
O	
Optional Instruments	4.6
Single Air Pressure Gauge for Hydraulic Brakes with Air Provision	4.6
OptiView™ Instrument Panel	3.1
Audible Alerts	3.1
Emergency Shutdown	3.1
Gear Shift Position	3.1
Ignition Sequence	3.1
Instrument Panel Screens	3.3
OnGuardALERT™ Forward Collision Warning System	3.5
Warning and Indicator Lamps	3.1

Index

Subject Page

P

Power Steering System 8.1
Powertrain Controls 5.5
- Allison Automatic Transmissions 5.5
- Backup Alarm 5.6
- Engine Brake Switch 5.6
- Engine Protection Shutdown Override Switch 5.6
- Manual Dump Valve 5.5

Pretrip and Post-Trip Inspection General Information 11.1

R

Raising and Lowering a Vehicle 14.1
- Lowering a Vehicle with Air Suspension 14.1
- Lowering a Vehicle without Air Suspension 14.2
- Raising a Vehicle with Air Suspension 14.1
- Raising a Vehicle without Air Suspension 14.1

Rear Towing Hookup 15.1
Running Out of Fuel 14.5
- Compressed Natural Gas (CNG) Engines 14.5
- Diesel Engines 14.5

S

Safety Precautions 12.1
Speedometer and Tachometer 4.4
- Speedometer 4.4
- Tachometer 4.4

Speedometer 17.6
Standard Instruments 16.10
- Coolant Temperature Gauge 16.10
- Engine Oil Pressure Gauge 16.10
- Fuel Level Gauge 16.10

Starting the Engine 16.1
- General Information 16.1
- MIL Lamp 16.2

Steering Column Adjustment 8.1
- Power Tilt/Telescope Steering Column and Adjustable Pedals 8.1
- Standard Tilt/Telescope Steering Column 8.1

Steering Control 5.8
- Power Tilt/Telescope Steering Column and Adjustable Pedals 5.8
- Standard Tilt/Telescope Steering Column 5.8

T

Torque Charts 18.1
Towing 14.2

V

Vehicle Identification Number (VIN) 1.1

W

Warning and Indicator Lamps 4.1
- ABS Warning 4.1
- Air Brake Warning 4.1
- Check Engine Warning 4.2
- Cruise Control Indicator 4.2
- Diesel Particulate Filter (DPF) Lamp 4.2
- Emergency Buzzer 4.3
- Engine Brake Indicator 4.3
- Fasten Seat Belt Warning 4.3
- Headlight High-Beam Indicator 4.3
- High Exhaust System Temperature (HEST) Lamp 4.3
- Hydraulic Brake System Warning 4.3
- Left-Turn Indicator 4.3
- Maintenance Warning Lamp 4.3
- Malfunction Indicator Lamp (MIL) 4.4
- Parking Brake On Warning 4.4
- Right-Turn Indicator 4.4
- Shift Inhibit Indicator 4.4
- Stop Engine Warning 4.4
- Transmission Overheat Warning 4.4
- Wait to Start Indicator 4.4

Warning and Indicator Lights 16.8
- ABS Warning 16.9
- Check Engine Warning 16.8
- Cruise Control Indicator 16.9
- Emergency Buzzer 16.9
- Fasten Seat Belts Warning 16.9
- Headlight High-Beam Indicator 16.9

Subject	Page
Hydraulic Brake System Warning	16.9
Left-Turn Indicator	16.8
Low Air Pressure Warning	16.9
Maintenance Warning	16.8
Malfunction Indicator Lamp (MIL)	16.8
Parking Brake On Warning	16.9
Right-Turn Indicator	16.9
Shift Inhibit Indicator	16.9
Stop Engine Warning	16.8
Transmission Overheat Warning	16.9
Transmission Warning	16.9
Wait to Start Indicator	16.9
Washing and Polishing	13.1
Weekly Post-Trip Inspection and Maintenance Checklist	11.3
Weekly Post-Trip Inspection and Maintenance Procedures	12.9
Windshield Wiper Controls	5.4